Split air conditioner
Wall mounted Type
Service manual

AUS-09H53R120P*(Db5)
AUS 12H53R120P*(Da4)
AUS-18H53R120C*(Da)
AUS-24H53R230T*(Da)

splitoff.ru

Большая библиотека технической документации
https://splitsystema48.ru/instrukcii-po-ekspluatacii-kondicionerov.html
каталоги, инструкции, сервисные мануалы, схемы.

CONTENTS

Contents 1

Safety precautions 2

Installation 2

Block diagram 10

Trouble shooting 11

Trouble solve methods 12

Fault diagnosis by symptom 16

Control specification 20

To disassemble mechanical parts 26

Exploded views and parts list 32

Wiring diagrams 48

Все каталоги и инструкции здесь: https://splitsystema48.ru/instrukcii-po-ekspluatacii-kondicionerov.html

SAFETY PRECAUTIONS

The following safety precautions must be taken when using your air conditioner.

1. Warning: Prior to repair, disconnect the power cord.

2. Use proper parts: use only exact replacement parts. (Also, we recommend replacing parts rather than repairing them.)

3. Use the proper tools: use the proper tools and test equipment, and know how to use them. Using defective tools or test equipment may cause problems later-intermittent contact, for example.

4. Power cord: prior to repair, check the power cord and replace it if necessary.

5. Avoid using an extension cord, and avoid tapping into a power cord. This practice may result in malfunction or fire.

6. After completing repairs and reassembly, check the insulation resistance.
Procedure: prior to applying power, measure the resistance between the power cord and the ground terminal. The resistance must be greater than 30 megohms.

7. Make sure that the grounds are adequate.

8. Make sure that the installation conditions are satisfactory. Relocate the unit if necessary.

9. Keep children away from the unit while it is being repaired.

10. Be sure to clean the unit and its surrounding area.

INSTALLATION

Selecting area for installation

Select an area for installation that is suitable to the customers needs.

1 Location of indoor unit

- Keep the air inlet and outlet at a far distance from the blockage.
- Keep the height distance between the indoor and outdoor unit at most 5m.
- Mount on the wall solid enough to bear the weight of the unit and not cause any shake.
- Avoid direct sunshine.
- A place easy for condensate drain and easy for connecting with the outdoor unit.
- Keep a far distance away from the fluorescent lamp, it may influence the operation of remote controller.
- Keep at least 1m away from the TV radio and other home appliances.

2 Location of outdoor unit

- A place solid enough to bear the weight of the unit and not cause any shake.
- Good ventilation, less dust, far from direct rain and sunshine.
- A place where the air discharged out of the outdoor unit or the operation noise will not annoy your neighbours.
- No blockage near the outdoor unit.
- Avoid places close to inflammable gas leakage.

Caution:

It is harmful to the air conditioner if it is used in the following environments: greasy areas (including area near machines). Salty area such as coastal areas, areas where sulfuric gas is present such as hot spring areas. Contact your dealer for advice.

Все каталоги и инструкции здесь: https://splitsystema48.ru/instrukcii-po-ekspluatacii-kondicionerov.html

INSTALLATION

Installation diagram of indoor unit and outdoor unit

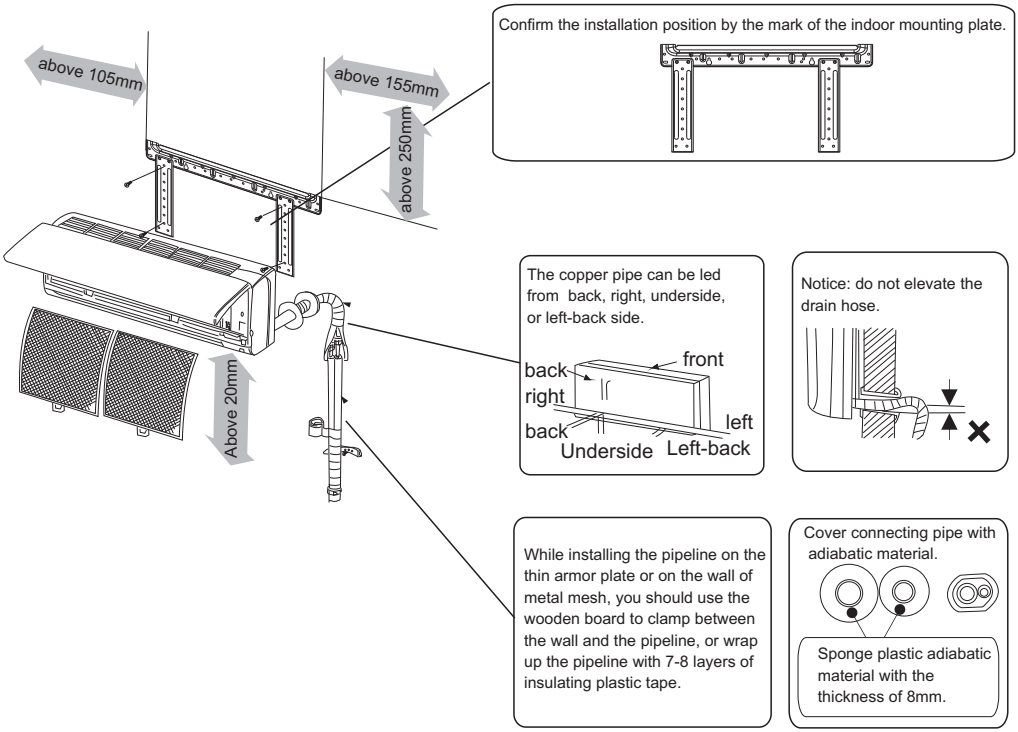

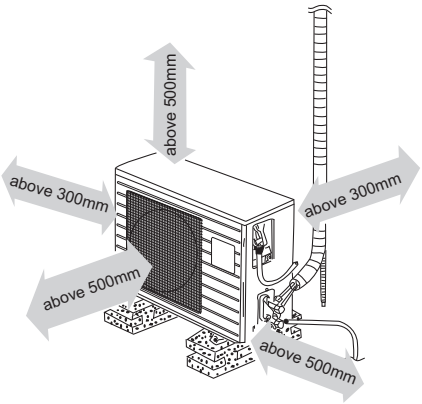

Все каталоги и инструкции здесь: https://splitsystema48.ru/instrukcii-po-ekspluatacii-kondicionerov.html

INSTALLATION

1 Securing the mounting plate and drill on the wall

- **Secure the mounting plate**
  The mounting plate should be attached to the structural part of wall (post etc).

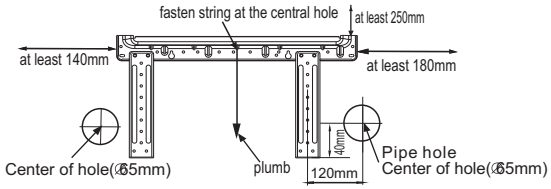

NOTICE:

- The holes at solid arrow position must be secured to avoid the shake of mounting plate.
- When the expansion bolts are used, two holes (11×20 or 11×26) that the distance between them is 450mm should be adopted.
- Confirm the position of holes, and drill holes on the wall.

2 Wiring

- Open the front grille;
- Remove the screw from electrical box cover, pull the electrical box cover away from the unit and set aside.
- Remove the screw from fastener, pull the fastener away from the unit and set aside.
- Connect the cable.
- Replace the fastener and electrical box cover.

Diagram

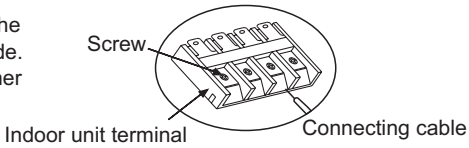

NOTE:

The appliance shall be installed in accordance with national wiring regulations.
The appliance must not be installed in the laundry.
The appliance must be installed 2.3m above the floor.
The appliance must be positioned so that the plug is accessible.
For some models whose cooling capacity are above 4600W (17000BTU/h), an all-pole disconnection device which has at least 3mm separation distance in all pole and a residual current device(RCD)with the rating of above 10mA shall be incorporated in the fixed wiring according to the national rule.

Все каталоги и инструкции здесь: https://splitsystema48.ru/instrukcii-po-ekspluatacii-kondicionerov.html

3 Installation of the drain hose

■ NOTE:

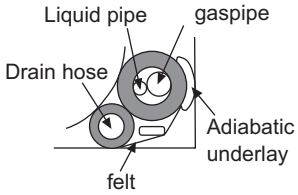

- The drain hose must be arranged beneath the copper pipe.
- The drain hose must not be hunched or twisted.
- While wrapping up the drain hose, do not pull it.
- The drain hose through the room must be wrapped up by the thermal insulation materials.
- The copper pipe and the drain hose must be wrapped up by felt strip. Adiabatic pad should be used at where the pipe contacts the wall.

■ ROUTE OF PIPE

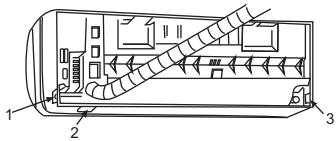

- If pipe comes out of the right side of the indoor unit, cut part “1” of the unit;
- If pipe comes out of the lower-right side of the indoor unit, cut part “2” of the unit;
- If pipe comes out of the left side of the indoor unit, cut part “3” of the unit.

■ REFIT OF DRAIN HOSE

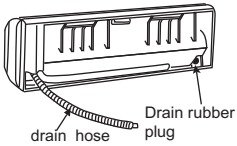

- If pipe comes out of the left side of the indoor unit, the drain hose must be refitted, otherwise water leakage may occur.
- Refit methods: Interchange the position of drain hose and drain rubber plug.
- Clearance is not allowed after refit, it would lead to water leakage.

Все каталоги и инструкции здесь: https://splitsystema48.ru/instrukcii-po-ekspluatacii-kondicionerov.html

■ Arrangement of the drain hose

- To drain the condensate water easily, the drain hose should be declined downwards.
  The following 5 arrangement methods are incorrect.

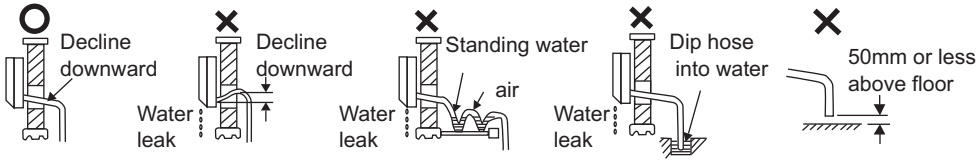

(Fig. 1) (Fig. 2) (Fig. 3) (Fig. 4) (Fig. 5)

- If you find the drain hose not long enough to connect with the indoor unit, you can extend it with the hoses in the accessory box.
- The drain hose through the room must be wrapped up with the special adiabatic material.

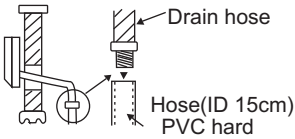

4 Installation of the indoor unit

Let pipe go through the wall hole and attach the indoor unit to the mounting plate.(Press the rib of indoor unit inside the hook of the mounting plate.)

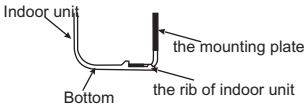

5 Pipe Connection

- The number of bent position of the pipe in the indoor unit should not exceed 10.
- The number of bent position of the pipe in the indoor unit and the outdoor unit should not exceed 15.
- The radius of bent position should be more than 10cm.
- Please break the evaporator craft tube with pincers before connecting. After exhausting the inside air, use the wrench to twist down the nut of connecting tube of the evaporator.
- Put some seal oil to cover the joint and the flare.
- Align the centre of joint in line with that of flare and tighten the nut of connecting pipe with wrench.

Attention:

Do not exhaust the inside air just by loosing the nut since there is the air of certain pressure inside the tube of indoor unit. Please do not make extra effort for fear of damaging the flare.

DIAMETER OF PIPE	TORQUE(N • m)
6.35mm (1/4”)	13.7---17.6
9.52mm (3/8”)	34.3---41.2
12.7mm (1/2”)	49.0---56.4
15.88mm (5/8”)	73.0---78.0

6 Wall sealing and Pipe fastening

- Use putty to seal the wall hole.
- Use clamp (pipe fastener) to secure the pipe at specified position.

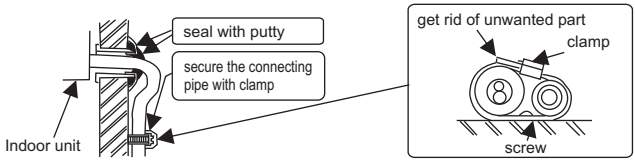

Все каталоги и инструкции здесь: https://splitsystema48.ru/instrukcii-po-ekspluatacii-kondicionerov.html

Installation diagram of indoor unit and outdoor unit

1 Wiring

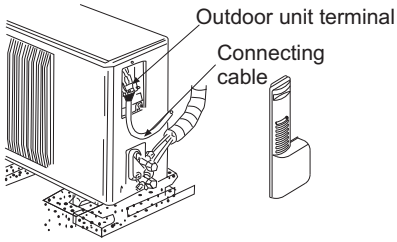

Notice:

- If the signal wire has to be bought separately, choose electric wire above 0.75mm.
- If the interconnection cord for power supply has to be replaced, please see the following table for reference.

MODEL	SPECS (Interconnection cord)
≤2700W(10000BTU/h)	≥1.0mm^2
3000W(11000BTU/h) -4000W(15000BTU/h)	≥1.5mm^2
4500W(18000BTU/h) -8000W(28000BTU/h)	≥2.5mm^2

WARNING:

- **Please take the electric circuit diagram attached to the indoor/outdoor units as major reference while installing.**
- **The power wire and signal wire between the indoor/outdoor units must be connected one by one as per corresponding number on the wiring terminal board.**
- **The connecting cables must be clipped together.**
- **Special cable must be used to connect indoor unit and outdoor unit. It should be ensured that the terminals are not influenced by external force. Poor connection may cause fire.**
- **The electric box cover must be mounted and secured in position, otherwise fire or electrical shock may occur because of dust or moisture.**
- The temperature of refrigerant circuit will be high, please keep the interconnection cable away from the copper tube.

Все каталоги и инструкции здесь: https://splitsystema48.ru/instrukcii-po-ekspluatacii-kondicionerov.html

2 Installation of the drain joint(only for heat pump type)

- Insert the outdoor double-channel drain joint in one of the bottom holes of the suitable size then connect drain hose and joint together.

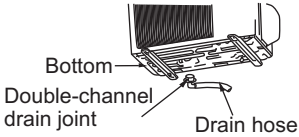

3 Joint of the connecting pipe

- Put some seal oil to cover the joint and the flare.
- Align the centre of joint in line with that of flare and tighten the nut of connecting pipe with wrench. (Adjust the torque by the same method of connecting pipe for indoor unit.)

4 Air exhausting

- Screw down the cap of both gas shut-off valve and liquid shut-off valve as well as the nut of service port.
- Connect the centre hose of the manifold gauge to the vacuum pump.
- Connect the manifold gauge to the outdoor unit gas line port as shown.

  Turn the vacuum pump on for about 10-15 minutes in order to evacuate the air.
- Close the manifold valve, then turn off the vacuum pump and disconnect the hose.
- Replace the cap on the 3-way valve.

  Set both the liquid and gas line valves to fully open position with the hexagonal wrench for the unit operation.
- Re-install the valve caps.

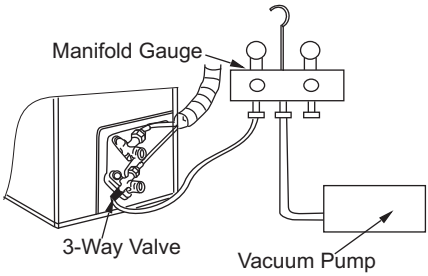

5 Process of flared tube

- Use the pipe cutter to cut off the broken part of flare.
- Remove burrs at the cut of the flare.
- Insert a nut into the connecting pipe and do flaring with specified flaring tools, reamers for example.

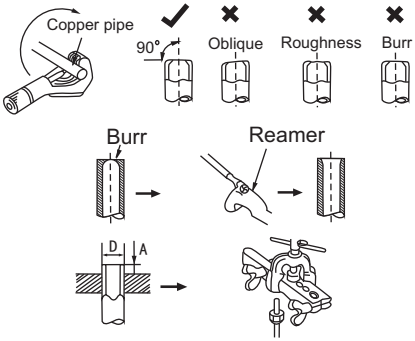

Remove burrs at the cut of the flare.

Outer diameter	A(mm)
6.35mm (1/4”)	2.0--2.5
9.52mm (3/8”)	3.0--3.5
12.7mm (1/2”)	3.5--4.0
15.88mm(5/8”)	4.0--4.5

- Check the quality of flaring technique.

Все каталоги и инструкции здесь: https://splitsystema48.ru/instrukcii-po-ekspluatacii-kondicionerov.html

6 Adding refrigerant

- If the connecting pipe is longer than 7 metres, add refrigerant as needed. (Cool only type) added amount A=(Lm-7m)×15g/m ; (Heat pump type)added amount A= (Lm-7m) ×50g/m. (A: amount of added refrigerant, L: the length of connecting pipe)

The length of connecting pipe (m)	7	8	9	10
(Cool only type)added amount (g)	0	15	30	45
(Heat pump type)added amount (g)	0	50	100	150

- Exhaust the air as the above-mentioned method.
- Screw the gas shut-off valve to close, connect charging hose(low pressure) to the service valve and then open gas shut-off valve again.
- Set the unit to cool operation mode.
- Connect the refrigerant bottle to the charging hose and then convert it.
- Fill in liquid refrigerant as the above table.
- Stop operation of the air conditioner.
- Disconnect the manifold gauge after turning off the shut-off valve, and then open gas shut-off valve again.
- Tighten nuts and caps of each valve.

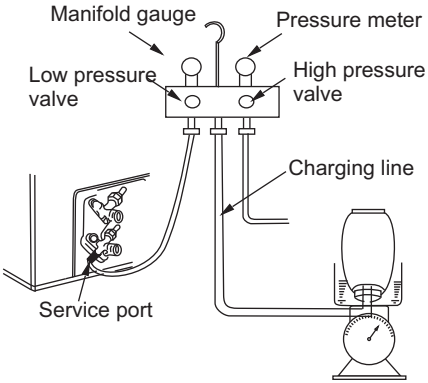

7 Relocation of the air conditioner.

- Refer to this procedure when the unit is relocated.

1. Carry out the pump down procedure.
2. Remove the power cord.
3. Disconnect the assembly cable from the indoor and outdoor units.
4. Remove the flare nut connecting the indoor unit and the pipe.
   At this time, cover the pipe of the indoor unit and the other pipe using a cap or vinyl plug to avoid foreign material entering.
5. Disconnect the pipe connected to the outdoor unit.
6. Make sure you do not bend the connection pipes in the middle and store together with the cables.
7. Move the indoor and outdoor units to a new location.
8. Remove the mounting plate for the indoor unit and move it to a new location.

Все каталоги и инструкции здесь: https://splitsystema48.ru/instrukcii-po-ekspluatacii-kondicionerov.html

INSTALLATION

8 Operation test

- Before test operation, wiring safety inspection must be carried out carefully again.

1. Emergency switch operation: Every press of emergency switch, the air conditioner runs as in the following order:

   Cool only type: Cool → Shut off

   Heat pump type: Cool → Heat → Shut off

2. Remote controller operation: If the indoor unit sounds like Di, Di when pressing I/O button, that indicates the air conditioner is under the operation of remote controller. After that, press every button to test their functions.

3. Check switch operation: Open the front grille and press the check button. Switch on the power source and then the operation test is activated. If the indicator lamps light up at first and then go out in succession or the LED window of the indoor unit illuminates at first and then goes out, the system is under normal operation. If one of the indicator lamps is flashing at all times, or failure codes are displayed on the LED window of the indoor unit, the system has something wrong and please check malfunction immediately.

BLOCK DIAGRAM

Refrigerant Cycle Block Diagram

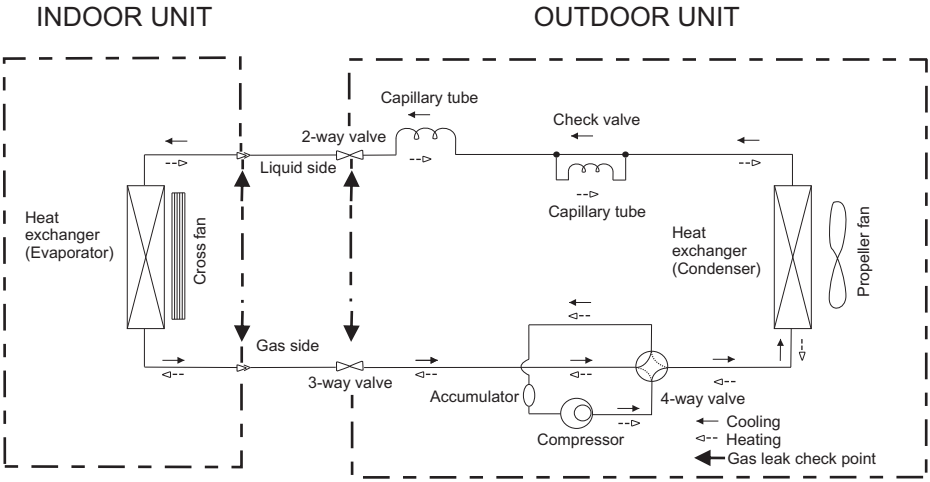

Все каталоги и инструкции здесь: https://splitsystema48.ru/instrukcii-po-ekspluatacii-kondicionerov.html

TROUBLE SHOOTING

Items to be checked first

1. Is the voltage of the power correct?
   The input voltage shall be rating voltage ±10%.
   The air conditioner may not operate properly if the voltage is out of this range.
2. Is the link cable connecting the indoor unit and the outdoor unit linked properly?
   Please refer to the wiring diagram
   Check the terminals if the indoor unit and outdoor unit are properly linked by the same number of cables.
3. When a problem occurs due to the contents illustrated in the table below, it is symptom not related to the malfunction of the air conditioner.

Operation of air conditioner	Explanation
In COOL operation mode, the compressor does not operate at a room temperature higher than the setting temperature that the indoor fan should operate. In a HEAT operation mode, the compressor does not operate at a room temperature lower than the setting temperature that indoor fan should operate.	It happens after a delay of 3 minutes when the compressor is reoperated. The same phenomenon occurs when a power is on. As a phenomenon that the compressor is reoperated after a delay of 3 minutes, the indoor fan is adjusted automatically with reference to a temperature of the air blow.
Fan speed setting is not allowed in AUTO or DRY mode.	The speed of the indoor fan is set to low in DRY mode. Fan speed of 3 steps is selected automatically in AUTO mode.
Compressor stops operation intermittently in DRY mode.	Compressor operation is automatically controlled in DRY mode depending on the room temperature and humidity.
Compressor of the outdoor unit is operating although it is turned off in HEAT mode.	When the unit is turned off while de-ice is activated, the compressor continues operation for up to 10 minutes(maximum) until the deice is completed.
Timer indicator lamp lights up and the air conditioner does not operate.	Timer is being activated and the unit is in ready mode. The unit operates normally if the timer operation is cancelled.
The compressor and indoor fan stop intermittently in HEAT mode.	The compressor and indoor fan stop intermittently if room temperature exceeds a setting temperature in order to protect the compressor from overheated air in HEAT mode.
Indoor fan and outdoor fan stop intermittently in HEAT mode.	The compressor operates in a reverse cycle to remove exterior ice in HEAT mode, and indoor fan and outdoor fan do not operate intermittently for within 20% of the total heat operation.
The compressor stops intermittently in COOL mode or DRY mode, and fan speed of the indoor unit decreases.	The compressor stops intermittently or the fan speed of the indoor unit decreases to prevent inside/outside air frozen depending on the inside/outside air temperature.

Все каталоги и инструкции здесь: https://splitsystema48.ru/instrukcii-po-ekspluatacii-kondicionerov.html

TROUBLE SOLVE METHODS

Indoor unit display and solve methods of protector stop ingredients in indoor unit and outdoor unit.

1.Press the emergency operation switch for 3 seconds, the buzzer sounds twice and display the trouble code.

2.The display panel show the relevant protector ingredients, it doesn't display if it hasn't the display panel.

3.It's show the protector code of indoor unit if the run indication flashed, it doesn't flash if it hasn't run indication. It's show the protector code of outdoor unit if the time indication flashed, it doesn't flash if it hasn't time indication. The flash times show the relevant protector code, for example, the time indication flashed "4#" times, show the over-current protector (count method: 1 time per second, 4 times aggregately → stop for 3 second →1 time per second, 4 times aggregately → stop for 3 second ……flashed circulatory; other code analogous.) it will exit for 3 minutes and resume normal display status.

protect ingredients code display	Indication lamp code display	Protect names	Solve methods
F1	1#(run indication display)	Heat overloading protector	This kind of trouble can renew automatically.
F2	2#(run indication display)	Cool freeze protector	
F3	3#(run indication display)	Instantaneous power cut	
F4	4#(run indication display)	direct current fan motor no feedback	
1F	1#(time indication display)	cool overloading protector	
2F	2#(time indication display)	exhaust overheating protector	
3F	3#(time indication display)	over or not enough pressure protector	
4F	4#(time indication display)	over-current protector	
5F	5#(time indication display)	IPM protector	
6F	6#(time indication display)	defrost state	
7F	7#(time indication display)	direct currentcompressor drive exceptional(no feedback)	
8F	8#(time indication display)	direct current compressor cannt start	

Indoor unit display and solve methods of troubles in indoor unit and outdoor unit.

1.The indoor unit and outdoor unit will stop if it has trouble, and display the trouble immediately. (it's allowed to run at the set speed when the air conditioner at the cooling state.

2.Display mode: the display show the relevant trouble code, it doesn't display if it hasn't the display panel.

3.It will be the trouble of indoor unit If the run indication of indoor unit flash. it doesn't display if it hasn't the run indication. It will be the trouble of outdoor unit If the time indication of indoor unit flash. it doesn't display if it hasn't the time indication. The flash times show the trouble code, for example, the run indication flashed "5#" times, show the bad communication of indoor unit and outdoor unit. (count method: 1 time per second, 5 times aggregately → stop for 3 second →1 time per second, 5 times aggregately → stop for 3 second ... ...flashed circulatory; other trouble code analogous.) the display renewed if the trouble solved.

Все каталоги и инструкции здесь: https://splitsystema48.ru/instrukcii-po-ekspluatacii-kondicionerov.html

TROUBLE SOLVE METHODS

Trouble code display	Indication lamp code display	Trouble names	Solve methods
E1	6#(run indication display)	The trouble of indoor unit room temperature sensor.	Inspect the Room temperature sensor whether short circuit or open circuit. Use the multimeter to measure the resistance of the room temperature sensor about 5K, if open circuit, please replace the temperature sensor.
E2	7#(run indication display)	The trouble of indoor unit pipe temperature sensor.	Inspect the pipe temperature sensor whether short circuit or open circuit. Use the multimeter to measure the resistance of the room temperature sensor about 5K, if open circuit, please replace the temperature sensor.
E3	8#(run indication display)	The trouble of PG motor.	Inspect the fan motor of indoor unit whether mangled, if not, use the remote controller to turn to fan mode from indoor mode, observe the fan motor whether running, if it running, inspect the feedback wiring harness of fan motor whether open circuit; if not, replace the control board of indoor unit, if it cannt running also, please replace the fan motor.
E5	5#(run indication display)	The trouble of bad communication of indoor unit and outdoor unit.	Inspect the AC input terminal of indoor unit and outdoor unit whether corresponding, if it is, use the direct current of multimeter to test whether the communication wire and AC N phase is 18V, if it is, inspect the connecting communication wiring harness and module board is alright, if it is, replace the module board of outdoor unit, if the trouble cannt solved also, please replace the electrical control board.
E6		The EEPRO of indoor unit error.	Replace the electrical control board.
1E	11#(time indication display)	The trouble of outdoor unit room temperature sensor.	Inspect the Room temperature sensor whether short circuit or open circuit. Use the multimeter to measure the resistance of the room temperature sensor about 5K, if open circuit, please replace the temperature sensor.
2E	12#(time indication display)	The trouble of outdoor unit pipe temperature sensor.	Inspect the pipe temperature sensor whether short circuit or open circuit. Use the multimeter to measure the resistance of the room temperature sensor about 5K, if open circuit, please replace the temperature sensor.
3E	13#(time indication display)	The trouble of exhaust sensor.	Inspect the exhaust sensor whether short circuit or open circuit. Use the multimeter to measure the resistance of the room temperature sensor about 50K, if open circuit, please replace the temperature sensor.
4E	14#(time indication display)	The EEPRO of indoor unit error.(outdoor unit)	Replace the module board of outdoor unit.
8E	18#(time indication display)	The trouble of PFC.	Replace the module board of outdoor unit.

Все каталоги и инструкции здесь: https://splitsystema48.ru/instrukcii-po-ekspluatacii-kondicionerov.html

TROUBLE SOLVE METHODS

Outdoor unit frequency restrict condition code: (The red led lamp in module board of outdoor unit display it.)

when the compressor is running normally, the LED lamp flashing show the frequency restrict condition code. For example, when the lamp flashed "4" times, show the total current restricted. (Count method: 1 time per second, 4 times aggregately → stop for 3 second →4 times aggregately → stop for 3 second ··· ···flashed circulatory; other code analogous.)

1# when the compressor is running normally, no restriction complication.

2# voltage restriction of power supply.

3# outdoor unit heat exchanger temperature restricted when cooling; indoor unit heat exchanger temperature restricted when heating(overload).

4# the total current restrict.

5# exhaust temperature restrict.

6# indoor unit heat exchanger temperature restricted when cooling (prevent freeze).

7# speed restrict of indoor unit's fan motor.

8# frequency modulation voltage restrict of outdoor unit.

Notice: frequency modulation voltage restrict of outdoor unit means inset an needle, then connect a potentiometer which can be adjusted, it can adjust the running frequency of compressor.

Protector stop ingredients of outdoor unit and trouble code display (The red LED lamp in module board of outdoor unit display it.)

If the air conditioner have the protector stop ingredients and some trouble when the compressor stopped, the LED lamp of outdoor unit flashed and display the protector stop ingredients and trouble code. The times the lamp flashed shows the relevant code. For example, the lamp flashed "6" times ,show the over current protect. (count method: 1 time per second, 6 times aggregately → stop for 3 second →1 time per second,6 times aggregately → stop for 3 second ··· ···flashed circulatory; other code analogous.)

1# short circuit or open circuit in room temperature sensor.

Solve method: Inspect the Room temperature sensor whether short circuit or open circuit. Use the multimeter to measure the resistance of the room temperature sensor about 5K in the normal temperature, if open circuit, please replace the temperature sensor.

2# heat exchanger temperature sensor open circuit.

Solve method: Inspect the Room temperature sensor whether short circuit or open circuit. Use the multimeter to measure the resistance of the room temperature sensor about 5K in the normal temperature, if open circuit, please replace the temperature sensor.

3# short circuit or open circuit in exhaust temperature sensor.

Solve method: Inspect the exhaust temperature sensor whether short circuit or open circuit. Use the multimeter to measure the resistance of the room temperature sensor about 50K in the normal temperature, if open circuit, please replace the temperature sensor.

4# Direct current compressor feedback.

Solve method: cut the power off, connect the power supply again, if there have any trouble also, replace the module board of outdoor unit.

5# The trouble of bad communication of indoor unit and outdoor unit.

Solve method: 1. inspect the connecting wire between indoor unit and outdoor unit, be sure the L and N haven't connect in reverse.
2. whether the communication wire connect reliably.
3. replace the module board.
4. replace the electrical control board of indoor unit.

Все каталоги и инструкции здесь: https://splitsystema48.ru/instrukcii-po-ekspluatacii-kondicionerov.html

TROUBLE SOLVE METHODS

6# Over current.
Solve method: 1. the air conditioner cooling / heating current exceed the initialization.
2. the voltage test loop broken or the component haven't welding tried, replace the module board.

7# No load.
Solve method: cut the power off, connect the power supply again, if there have any trouble also, replace the module board of outdoor unit.

8# The pressure over or not enough.
Solve method: 1. whether the voltage exceed 255V or less than 170V.
2. the voltage test loop broken or the component haven't welding tried, replace the module board.

9# The direct current compress cann't start-up.
Solve method: cut the power off, connect the power supply again, if there have any trouble also, replace the module board of outdoor unit.

10# Overload when cooling.
Solve method: inspect the radiation of the indoor unit and outdoor unit whether alright or the outdoor temperature too hot, or adding the Refrigerant again.

11# Deforst state
Solve method: it can be renew automatically.

12# IPM protect
Solve method: replace the module board of outdoor unit.

13# The EEPRO error.
Solve method: replace the module board of outdoor unit.

17# Exhaust over heating protect.
Solve method: adding the Refrigerant or adding the Refrigerant after vacuumized.

Все каталоги и инструкции здесь: https://splitsystema48.ru/instrukcii-po-ekspluatacii-kondicionerov.html

FAULT DIAGNOSIS BY SYMPTOM

- No cooling
  - No cooling effect at all
    - Fan motor error
      - Fan motor or its capacitor faults.
      - Loose connection or badly contact.
      - Control circuit error.
    - compressor does not operate
      - Voltage may appear a little lower or higher.
      - Loose or wrong connection.
      - Compressor faults or jumps for overloading.
      - Control circuit error.
    - Leakage of refrigerant
      - Recharge the refrigerant at leaking place.
    - Block of the cooling system
      - The capillary, pipeline are blocked or the valve is not open or the connecting tube is folded flat.
  - Poor cooling efficiency
    - Insufficient refrigerant
      - Some leakage in the valve.
      - Some cracks, welding failure in the system.
      - Extra fluorin is added during mounting.
    - Air filter is blocked
      - No periodical cleaning.
      - Accumulated lampblack, dust or contaminated ambient environment.
    - Poor efficiency of heat dissipating on the outdoor unit
      - Mounting location is not suitable, such as near the wall.
      - Air outlet is blocked or accumulated lampblack or dust is attached to the vane.
    - Too high ambient temperature
      - The outdoor unit gets exposed to the sun for too long period.
      - Not for residential use.
    - Air conditioning burden is not adequate for the room
      - The doors and windows are not closed well; too weak of input cooling power or too many heat resources in the room.
    - Low airflow volume
      - Low fan motor frequency or capacitor is not functional.
      - Low fan speed or the fan motor faults.
    - The four-way valve error
      - The distributing air of the four-way valve may have mixed together; the valve core or solenoid valve faults.
    - Blockage in the system
      - The valve is not completely open; the capillary or Pipeline is half blocked.
      - Connecting tube is folded flat.

Все каталоги и инструкции здесь: https://splitsystema48.ru/instrukcii-po-ekspluatacii-kondicionerov.html

FAULT DIAGNOSIS BY SYMPTOM

- No heating
  - No heating effect at all
    - Fan motor error
      - Fan motor or its capacitor faults.
      - Loose connection or badly contact.
      - Control circuit error.
    - compressor does not operate
      - Voltage may appear a little lower or higher.
      - Loose or wrong connection.
      - Compressor faults or jumps for overloading.
      - Control circuit error.
    - Leakage of refrigerant
      - Recharge the refrigerant at leaking place.
    - Block of the cooling system
      - The capillary, pipeline are blocked or the valve is not open or the connecting tube is folded flat.
    - The four-way valve or solenoid valve faults.
      - The four-way valve did not commutate or the distributing air of the four-way valve may have mixed together.
  - Poor heating efficiency
    - Insufficient refrigerant
      - Some leakage in the valve.
      - Some cracks, welding failure in the system.
      - Extra fluorin is added during mounting.
    - Air filter is blocked
      - No periodical cleaning.
      - contaminated ambient environment.
    - Too low ambient temperature
      - Below 0℃.
    - Too thick frost generated on the condenser.
      - The condenser does not defrost, no smooth air circulation.
    - Extra refrigerant or mixing air in the system
      - Discharge the redundant refrigerator recharge the refrigerant after vacuum extraction.
    - Air conditioning burden is not adequate for the room
      - The doors and windows are not closed well; too weak of input cooling/heating power.
    - The condenser is too dirty
      - Accumulated lampblack or dust is attached to the vane.
    - The electric heater is not working
      - Not satisfy the conditions for electric heater running.
      - Plug cords may be loose.
    - Low airflow volume
      - Low fan motor frequency or capacitor is not functional.
      - Low fan speed or the fan motor faults.
    - The four-way valve error
      - The distributing air of the four-way valve may have mixed together; the valve core or solenoid valve faults.
    - Blockage in the system
      - The valve is not completely open; the capillary or Pipeline is half blocked.
      - Connecting tube is folded flat.

Все каталоги и инструкции здесь: https://splitsystema48.ru/instrukcii-po-ekspluatacii-kondicionerov.html

FAULT DIAGNOSIS BY SYMPTOM

- Noisy
  - Noise from indoor unit
    - Collision sound of the machine — Fixing bolts somewhere may loose or rub, some spare parts may not match very well.
    - Flowing sound of the liquid — Refrigerant circulation or pressure change of refrigerant while switch on/off.
    - Sound of the running fan motor — Vane imbalance or distortion, rupture; loose screw of vane.
    - Sound of plastic pieces rubbing or deforming — Plastic pieces deform due to expansion when hot and shrink when cold. Or some spare parts may not match very well.
  - Noise from Outdoor unit
    - Collision sound of the machine — Collision of the pipeline, fixing screws loose or deform caused by rubbing.
    - Oscillation sound — Inappropriate installation method; the unit does not match with the installation kit very well or the compressor quivers acutely.
    - Sound of running fan motor — Vane imbalance or distortion.
    - Sound made by cooling operation — Refrigerant circulation or vane distortion.
    - Sound of running compressor — Something wrong with the compressor, such as oil shortage, valve slice distortion.
  - Noise from the whole unit
    - Resonance sound
      - The unit does not match with the installation kit very well
      - The whole unit resonates thedoor and window.
    - Collision sound of the machine — Collision of the pipeline, fixing screws loose or plastic pieces deform.
    - Sound made by compressor or motor — The compressor or motor makes abnormal noise.
    - Flowing sound of condensed water — Condensed water is attached to the vane.
    - Sound of running fan motor — Vane imbalance or distortion.

Все каталоги и инструкции здесь: https://splitsystema48.ru/instrukcii-po-ekspluatacii-kondicionerov.html

FAULT DIAGNOSIS BY SYMPTOM

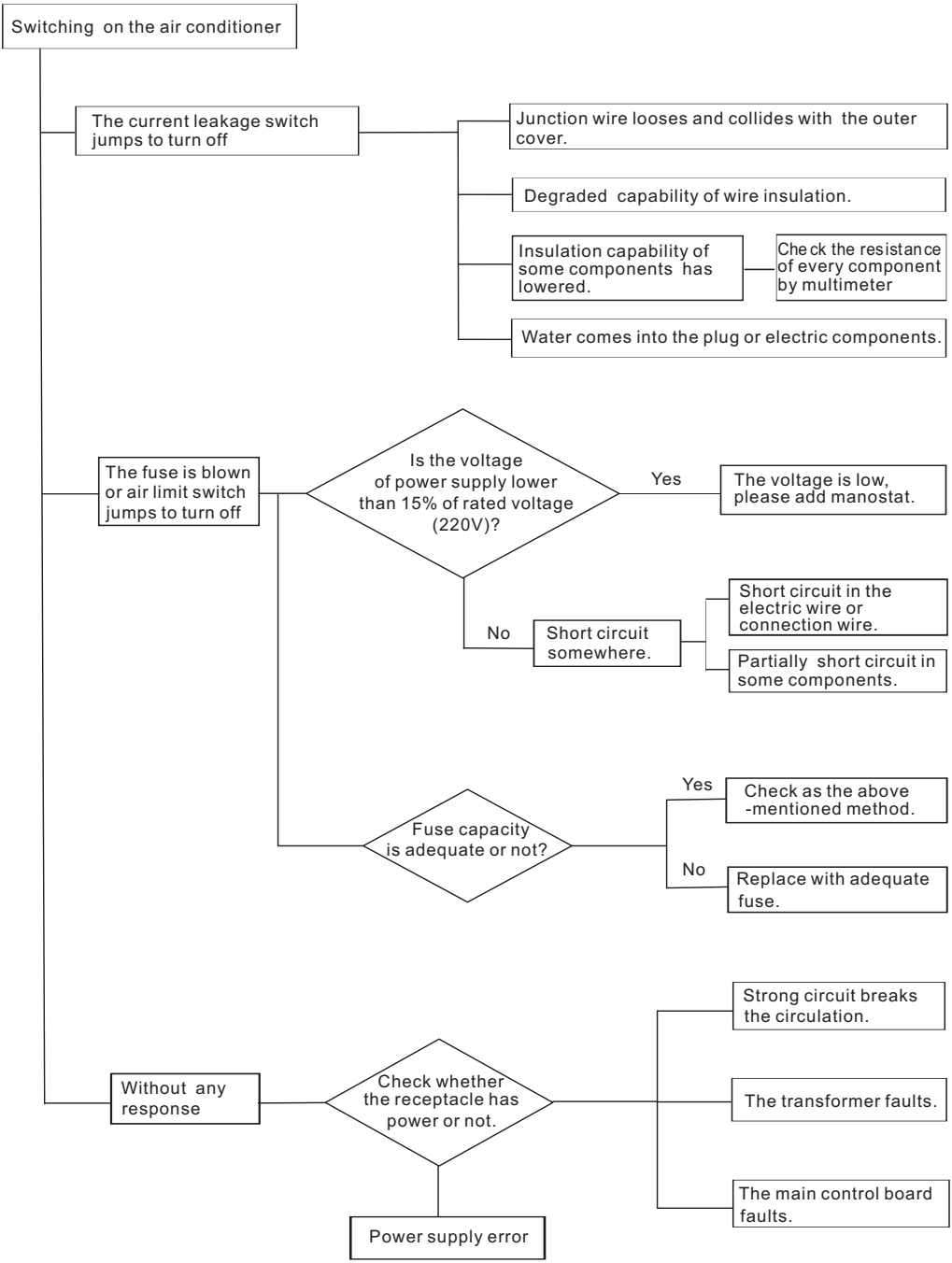

Все каталоги и инструкции здесь: https://splitsystema48.ru/instrukcii-po-ekspluatacii-kondicionerov.html

CONTROL SPECIFICATION

1 ABBREVIATION

ST: Setting Temperature
PT: Indoor coil Pipe Temperature
RT: Room Temperature
OT: Outdoor coil pipe temperature
OFAN: Outdoor fan
IFAN: Indoor fan
COMP: Compressor

2 OPERATION OF MAIN BOARD

COOL MODE

- The ST at cool mode is adjustable within16℃-31℃.
- When RT≥ST, both the compressor and the outdoor fan start;
  When RT<ST-1℃, the compressor stops and 18 seconds later, the outdoor fan will stop.
  But the indoor fan keeps running at predetermined speed.
- Once turning on the unit while set at cool mode, the indoor fan immediately runs at predetermined speed; if all the conditions meet with the requirement of compressor operation, both the outdoor fan and compressor start running. If not, either the outdoor fan or compressor could start.
- The four-way valve keeps being off all the time at cool mode.

Condensate dew prevention

If the horizontal air flow louver is set at low angle on COOL mode, after a while, it will auto swing to its maximum angel for system protection. 3 minutes later, the horizontal air flow louver will resume to its original position.

Anti-ice function

- When PT≤-1℃ for 5 minute, the compressor and outdoor fan stop and indoor fan runs at high speed. Meanwhile, the anti-ice protection will warning.
- When PT≥7℃ for 5 minutes, anti-ice protection deactivates, both the compressor and the outdoor fan start operation.

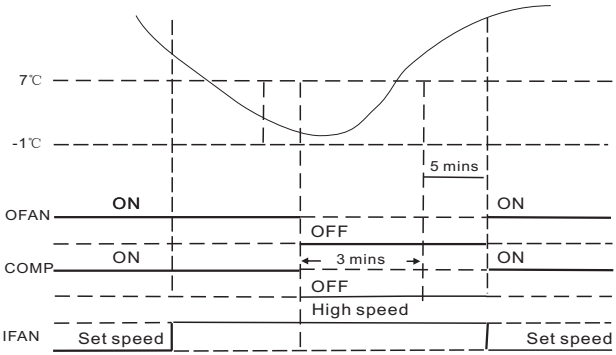

Все каталоги и инструкции здесь: https://splitsystema48.ru/instrukcii-po-ekspluatacii-kondicionerov.html

CONTROL SPECIFICATION

HEAT MODE

- If the air conditioner is off and then turned on while set at COOL ,HEAT or DRY mode, it will take approximately 3 minutes for the compressor to start.
- The ST at heat mode is adjustable within16℃-31℃.
- When RT≥ST, the compressor stops; when RT<ST-1℃, the compressor starts.
- Once turning on the unit while set at heat mode, if all the conditions meet with the requirement of compressor operation, the four-way valve gets charged and 8 seconds later, the compressor and outdoor fan start running.

Strong-wing prevention :

- A.PT<27,the indoor fan stops running, the swing louver cannot be controlled by the remote controller.
  B.34>PT≥27,the indoor fan runs at low speed, the sweep louver erects.
  C.PT≥34,the indoor fan and the swing louver can be controlled normally.

Heat overload protection:

- when Pt≥62℃ for 10 seconds, the compressor stops.
- when Pt<48℃, and after 3 minutes, the compressor starts.

Deice control:

- Conditions for activating deice:

1. a. The working hours of compressor accumulates to be 40 minutes.
   b. When OT≤-3℃ for 5 minute, and Pt≥5℃.
2. a. The working hours of compressor accumulates to be 40 minutes.
   b. When OT≤-7℃ for 5 minute, and PT<5℃.
3. a. The working hours of compressor accumulates to be 40 minutes.
   b. When OT≤-10℃ for 5 minute, and PT<-3℃.

Electric-heat control:

- Conditions for initiating electric-heat function:
  a. RT≤23℃; b. RT+3℃ ≤ST; c. The indoor fan runs;
  d. Turn on the electric-heat key; e. PT<50℃
- Conditions for terminating electric-heat function:
  a. PT≥50℃; b. RT≥26℃; c. The indoor fan stops running;
  d. Turn off the electric-heat key; e. Mode change.
- Conditions for terminating electric-heat function:
  a. PT≥50℃; b. RT≥26℃; c. The indoor fan stops running;
  d. Turn off the electric-heat key; e. Mode change.

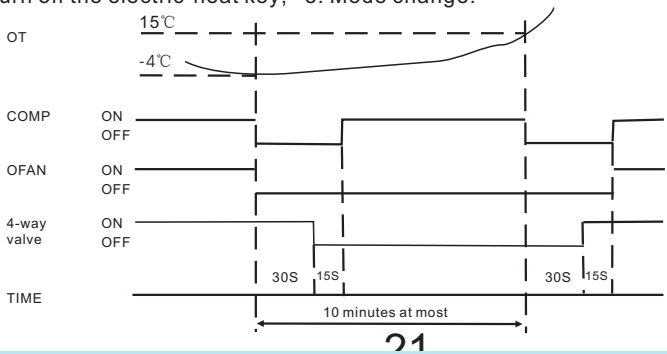

Все каталоги и инструкции здесь: https://splitsystema48.ru/instrukcii-po-ekspluatacii-kondicionerov.html

CONTROL SPECIFICATION

DRY MODE

- In this mode, the air conditioner automatically sets the room temperature and this temperature is incontrollable by remote controller. The initial ST =RT-2℃.
- Control during dry mode:
  a. When RT<15℃, dry mode is not available; when RT≥15℃, the compressor intermittently runs under the influence of TS and RT.
  b. When RT≥23℃, if RT≥ST, the compressor runs intermittently as this:
  Run for 8 minutes → Stop for 3 minutes

  If RT<ST, the compressor runs intermittently as this:
  Stop for 4 minutes → Run for 1 minute

  c. When RT<23℃, if RT≥ST, the compressor runs intermittently as this:
  Run for 2 minutes → Stop for 3 minutes

  If RT<ST, the compressor runs intermittently as this:
  Stop for 4 minutes → Run for 1 minute

  d. In this mode, the indoor fan keeps running at low speed with the same pace as the compressor, and this speed can not be controlled by remote controller.

AUTO MODE

- In this mode, the air conditioner can automatically adjust the room temperature to decide the most suitable temperature. At the start of operation, the unit will automatically select the operation mode according to the room temperature. The following table shows the conditions which are set at start up.

Room Temperature (RT)	Cool only type		Heat pump type	
	Mode	Initial Setting Temperature	Mode	Initial Setting Temperature
RT≥26℃	Cool	24℃	Cool	24℃
26℃>RT≥25℃		RT-2		RT-2
25℃>RT≥23℃	Dry	RT-2	Dry	RT-2
RT<23℃		21℃	Heat	26℃

- Auto mode entering
  a. Once some operation mode is determined, it can not be changed even if the RT has altered.
  b. You can change the operation mode by remote controller.
- If restart within 2 hours, the unit will resume the same operation mode as before.
  If restart after 2 hours, the unit will select the operation mode according to the initial room temperature.
- At auto mode the ST can only be set + or - 2 ℃of the RT.

Все каталоги и инструкции здесь: https://splitsystema48.ru/instrukcii-po-ekspluatacii-kondicionerov.html

CONTROL SPECIFICATION

FAN MODE

In this mode, the outdoor unit does not operate. The indoor fan alone operates.

Press UP & DOWN SWING button or LEFT & RIGHT SWING button to change air flow direction.

Press FAN SPEED button to change the fan speed of indoor unit.

LIGHT-WAVE MODE (only applied to light-wave series)

Every press of LIGHT-WAVE button, the air conditioner will cycle in the order of enter/quit light-wave mode. Once entering the light-wave mode, the light-wave icon will light up on display panel of the indoor unit and the air conditioner will judge whether to connect the light-wave tube by ambient temperature.

TURBO function (only applied to turbo series)

This function will make the air conditioner heat or cool quickly and during this period, the noise of the air conditioner will increase. Turbo function can be only started up in heat or cool mode(turbo heating or turbo cooling) otherwise, it can not be started up. When the air conditioner is in cool or heat mode, press turbo button to initiate turbo function, the remote controller displays “TURBO” and the icon of fan speed is“ meanwhile the air conditioner cannot be controlled by the remote controller. Press turbo button again or start up sleep mode or transit modes to exit turbo function. After exiting turbo function the fan runs at low speed.

FRESH AIR function (only applied to fresh air series)

When the air conditioner is on, press fresh air button to initiate or stop fresh air function. While this function is initiated the remote controller displays“ FRESH AIR”,meanwhile the fan starts to run, the letter “ FRESH AIR”extinguishes and the fan stops if fresh air function stops.

CLEAN function (only applied to clean series)

When the air conditioner is on, press CLEAN/PLASMA button for 3 seconds to initiate or stop clean function. While this function is initiated the remote controller displays CLEAN and it will extinguish if clean function stops. Please note that after clean function starts up, the evaporator will only clean automatically on the condition that the air conditioner is turned off normally.Moreover, after the evaporator is checked dirty by the system, the LED of indoor unit will display CLEAN to remind you of starting up the clean function.

AIR QUALITY CHECKING function (only applied to air quality checking series)

When the air conditioner is on, air quality checking function starts up automatically, at the same time the air quality indicator light on the indoor unit will flash once, which shows that the air conditioner starts up air quality checking function. After the air quality checking function is initiated, if the air quality is good the indicator light extinguishes; if the air quality is bad the indicator light will flash 5 times then lighten. Air quality is showed through the lighteness of the indicator light, the lighter the indicator the worse the air quality. When the indicator light is lighten, fresh air function is supposed to be started up. After the air is renewed, the system will stop or continue fresh air function according to the air quality. You can also stop fresh air function as you like. When the air conditioner is turned off, the indicator light will flash once to show the air quality checking function is in gear. And every time starting up inoizer, aux-heat, light-wave, plasma,clean and turbo function the indicator light will flash once.

Все каталоги и инструкции здесь: https://splitsystema48.ru/instrukcii-po-ekspluatacii-kondicionerov.html

SLEEP mode

Normal sleep

When the air conditioner is in cooling and dry mode, the indoor fan runs at low speed After one hour of operation the set temperature will increase by 1℃.One hour later, the set temperature will increase by 1℃ once more. The unit will then continue operating at 2℃ above the set temperature.

When the air conditioner is in heating mode , the indoor fan runs at low speed. After one hour of operation the set temperature will decrease by 2℃. One hour later, the set temperature will decrease by 2℃ once more. The unit will then continue operating at 4℃ below the set temperature.

Sleep mode 1 1

When the air conditioner is in cooling and dry mode and 23℃≥st≥16℃,during the 3 hours after sleep mode 1 start up ,the set temperature will increase by 1℃ every hour .The unit will continue operating at 3℃ above the set temperature. 8 hours later, the set temperature will decrease 2℃.The unit will then continue operating at this temperature.

When 24℃≥st≥27℃, during the 2 hours after sleep mode 1 start up, the set temperature will increase by 1℃ every hour .The unit will continue operating at 2℃ above the set temperature.8 hours later, the set temperature will decrease 2℃,the unit will continue operating at this temperature.

When 28℃≥st≥31℃,the unit will operate at the set temperature all along.

When the air conditioner is in heat mode and18℃≥st≥16℃, the unit will operate at the set temperature all along.

When 19℃≥st≥25℃, during the 2 hours after sleep mode 1 start up, the set temperature will decrease by 1℃ every hour. The unit will continue operating at 2℃ below the set temperature.8 hours later, the set temperature will increase 2℃, the unit will continue operating at this temperature .

When 26℃≥st≥31℃, during the 3 hours after sleep mode 1 start up, the set temperature will decrease by 1℃ every hour. The unit will continue operating at 3℃ below the set temperature.8 hours later, the set temperature will increase 2℃.The unit will then continue operating at this temperature.

Sleep mode 2 2

When the air conditioner is in cooling and dry mode and 23℃≥st≥16℃, during the 3 hours after sleep mode 2 start up ,the set temperature will increase by 1℃ every hour .The unit will continue operating at 3℃ above the set temperature.7 hours later, the set temperature will decrease 1℃. The unit will then continue operating at this temperature.

When 24℃≥st≥27℃, during the 2 hours after sleep mode 2 start up, the set temperature will increase by 1℃ every hour .The unit will continue operating at 2℃ above the set temperature.7 hours later, the set temperature will decrease 1℃,the unit will continue operating at this temperature .

When 28℃≥st≥31℃,the unit will operate at the set temperature all along.

When the air conditioner is in heat mode and18℃≥st≥16℃, the unit will operate at the set temperature all along.

When 19℃≥st≥25℃, during the 2 hours after sleep mode 2 start up ,the set temperature will decrease by 1℃ every hour .The unit will continue operating at 2℃ below the set temperature.7 hours later, the set temperature will increase 1℃, the unit will continue operating at this temperature .

When 26℃≥st≥31℃, during the 3 hours after sleep mode 2 start up, the set temperature will decrease by 1℃ every hour. The unit will continue operating at 3℃ below the set temperature. 7 hours later, the set temperature will increase 1℃.The unit will then continue operating at this temperature.

Все каталоги и инструкции здесь: https://splitsystema48.ru/instrukcii-po-ekspluatacii-kondicionerov.html

Sleep mode 3 3

When the air conditioner is in cooling and dry mode and 23℃≥st≥16℃ , during the 3 hours after sleep mode 3 start up, the set temperature will increase by 1℃ every hour .The unit will continue operating at 3℃ above the set temperature.
When 24℃≥st≥27℃, during the 2 hours after sleep mode 3 start up, the set temperature will increase by 1℃ every hour .The unit will continue operating at 2℃ above the set temperature.
When 28℃≥st≥31℃,the unit will operate at the set temperature all along.

When the air conditioner is in heat mode and18℃≥st≥16℃, the unit will operate at the set temperature all along.
When 19℃≥st≥25℃, during the 2 hours after sleep mode 3 start up ,the set temperature will decrease by 1℃ every hour. The unit will continue operating at 2℃ below the set temperature.
When 26℃≥st≥31℃,during the 3 hours after sleep mode 3start up, the set temperature will decrease by 1℃ every hour. The unit will continue operating at 3℃ below the set temperature.

PLASMA function (only applied to plasma series)

When the air conditioner is on, press CLEAN/PLASMA button to start or stop plasma function.

The LED of the remote controller displays while it is initiated and extinguishes while it stops.

INOIZER function(only applied to inoizer series)

Press inoizer button to start or stop inoizer function when the air conditioner is on or set timer.

The LED of the remote controller displays while it is initiated and extinguishes

This function can only be stopped by pressing inoizer button or turning off the air co

Все каталоги и инструкции здесь: https://splitsystema48.ru/instrukcii-po-ekspluatacii-kondicionerov.html

TO DISASSEMBLE MECHANICAL PARTS

Stop operation of the air conditioner and remove the power cord before repairing the unit.

The following pictures taking this model an example are presented just for the purpose of illustration please take real object as major reference.

Indoor unit

No	Parts	Procedure	Remark
1	Front grille	1.Stop the air conditioner operation and block the main power. 2.Contract the second finger to the left ,and right handle and pull to open the inlet grille.	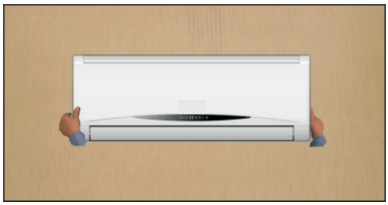
		3.Draw away signal line.	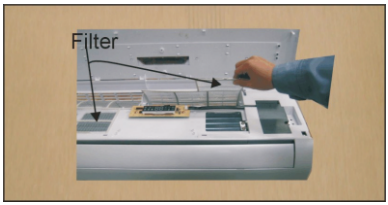
		4.Take the left and right filter out.	
		5. Loosen two fixing screw of front grille.	
		6.Put hands at the two ruts of the body, then pull the front panel out .	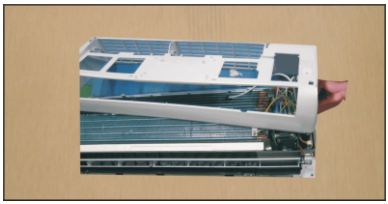

Все каталоги и инструкции здесь: https://splitsystema48.ru/instrukcii-po-ekspluatacii-kondicionerov.html

TO DISASSEMBLE MECHANICAL PARTS

No	Parts	Procedure	Remark
2	Electrical parts	1.Loosen the earth screw in evaporator.	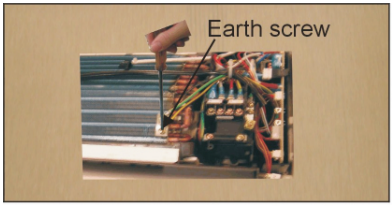
		2.Loosen the stepping motor line, and pull softly the indoor pipe temperature sensor out from the pipe casing.	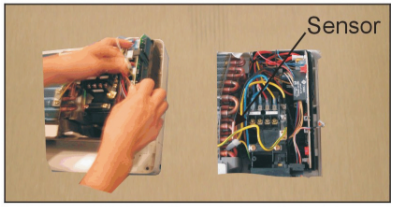
		3.Push the hook outside to take the electrical box out easily.	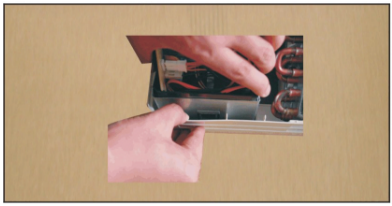
		4.Separate the electrical box from the indoor unit.	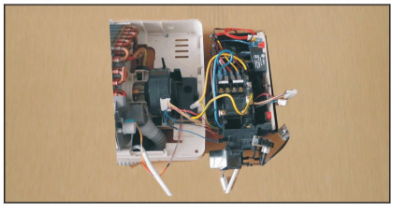
3	Assy tray drain	1. Push the left and right hooks to make the assy pulled out.	

Все каталоги и инструкции здесь: https://splitsystema48.ru/instrukcii-po-ekspluatacii-kondicionerov.html

TO DISASSEMBLE MECHANICAL PARTS

No	Parts	Procedure	Remark
		2. Separete the assy tray drain from the body.	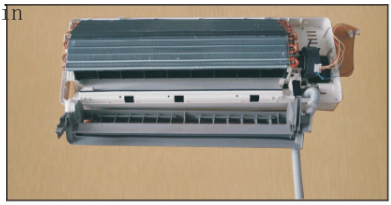
4	Evaporator	1.Push the left hook and separate the left part out of evaporator.	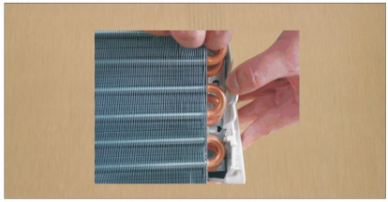
		2.Push the right hook and separate the right part out of evaporator.	
		3.Separate the evaporator from the indoor unit.	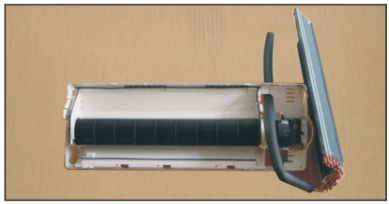
5	Fan motor and cross fan	1.Separate the fan motor from the fan.	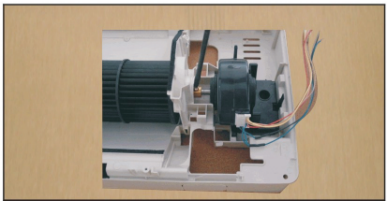

Все каталоги и инструкции здесь: https://splitsystema48.ru/instrukcii-po-ekspluatacii-kondicionerov.html

TO DISASSEMBLE MECHANICAL PARTS

Outdoor unit

AUS-09H53R120L*(Db) AUS-12H53R120L*(Da) AUS-12H53R120P*(Da)
AUS-12H53R120D*(De) AUS-09H53R120P*(Db) AUS-18H53R120D*(Da)

No	Parts	Procedure	Remark
1	Cabinet	1.Turn off the unit and remove the power cable. 2.Remove the upper cabinet, the front cabinet and back cabinet.	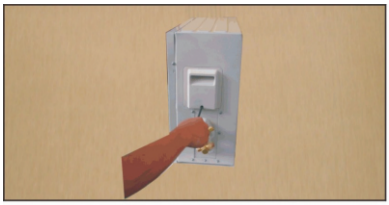
2	Fan motor & propeller fan	1.Remove the nut flange. (Turn to the right to remove as it a left turned screw) 2.separate the propeller fan from fan motor. 3.Loosen the fixed screw of fan motor,separate the fan motor from outdoor unit	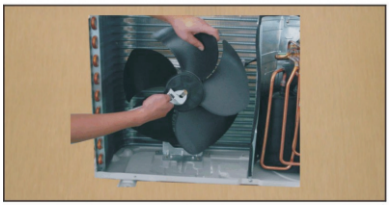
3	Ass'y control out	1.Loosen the fixing screw of the base-electrical control . 2.separate the connector. 3.Separate the ass' y control out from the outdoor unit.	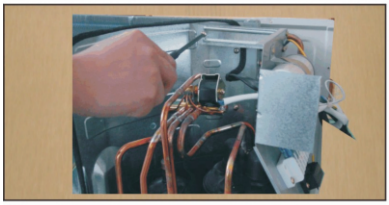 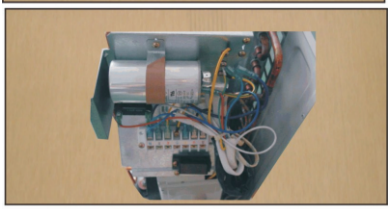 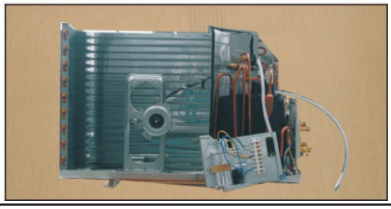

Все каталоги и инструкции здесь: https://splitsystema48.ru/instrukcii-po-ekspluatacii-kondicionerov.html

Outdoor unit AUS-18H53R220D*(Da) AUS-24H53R230T*(Da)

No	Parts	Procedure	Remark
1	Cabinet	1.Turn off the unit and remove the power cable. 2.Remove the upper cabinet, the front cabinet and back cabinet.	
2	Fan motor & propeller fan	1.Remove the nut flange. (Turn to the right to remove as it a left turned screw) 2.separate the propeller fan from fan motor. 3.Loosen the fixed screw of fan motor,separate the fan motor from outdoor unit	
3	Ass'y control out	1.Loosen the fixing screw of the base-electrical control .	

Все каталоги и инструкции здесь: https://splitsystema48.ru/instrukcii-po-ekspluatacii-kondicionerov.html

TO DISASSEMBLE MECHANICAL PARTS

No	Parts	Procedure	Remark
		2.Loosen the nut flange on compressor.	
		3.Separate the connector.	
		4.Separate the ass' y control out from the outdoor unit.	

Все каталоги и инструкции здесь: https://splitsystema48.ru/instrukcii-po-ekspluatacii-kondicionerov.html

Exploded Views and Parts List

Indoor unit AUS-09H53R120L*(Db) AUS-12H53R120L*(Da)

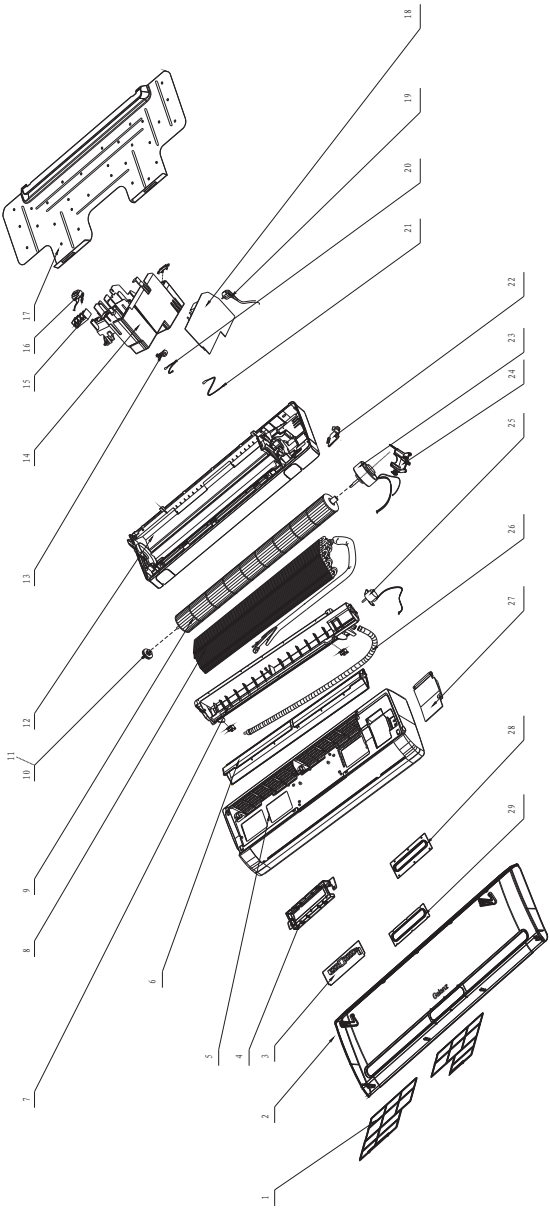

Все каталоги и инструкции здесь: https://splitsystema48.ru/instrukcii-po-ekspluatacii-kondicionerov.html

Exploded Views and Parts List

Indoor unit AUS-09H53R120L*(Db) AUS-12H53R120L*(Da)

No.	English Part Name	qty.	remark	No.	English Part Name	qty.	remark
1	air filter	2	left and right are sameness	26	Drain hose	1	
2	Front panel	1	L14、L15、L16 parted as upper panel and lower panel	27	Electrical control cover	1	
3	LED	1		28	Indoor display panel	1	L1、L17(display piece), L15(transparency piece), L15without
4	Electrical control box	1	L14(control box), L15(display box), L16 without, L17without	29	Decorate ring	1	L1、L3、L16、L18 without, L15(decorate tape), L17(decorate board)
5	Enclosure	1					
6	Swing louver	1					
7	Water collecting tray	1					
8	Evaporator	1					
9	Indoor unit fan	1					
10	Oil bearing	1					
11	Rubber bear support	1					
12	Bottom enclosure	1					
13	Power supply cord clip	1					
14	Electrical control box	1					
15	Indoor unit terminal block	1					
16	Transformer	1					
17	Mounting plate	1					
18	Main control board	1					
19	Power supply cord	1					
20	Room temperature sensor	1					
21	Pipe temperature sensor	1					
22	Pipe fixing plate	1					
23	fan motor	1					
24	Electrical holder	1					
25	Stepping motor	1					

Все каталоги и инструкции здесь: https://splitsystema48.ru/instrukcii-po-ekspluatacii-kondicionerov.html

Exploded Views and Parts List

Indoor unit

AUS-12H53R120D*(De) AUS-18H53R220D*(Da) AUS-18H53R120D*(Da)

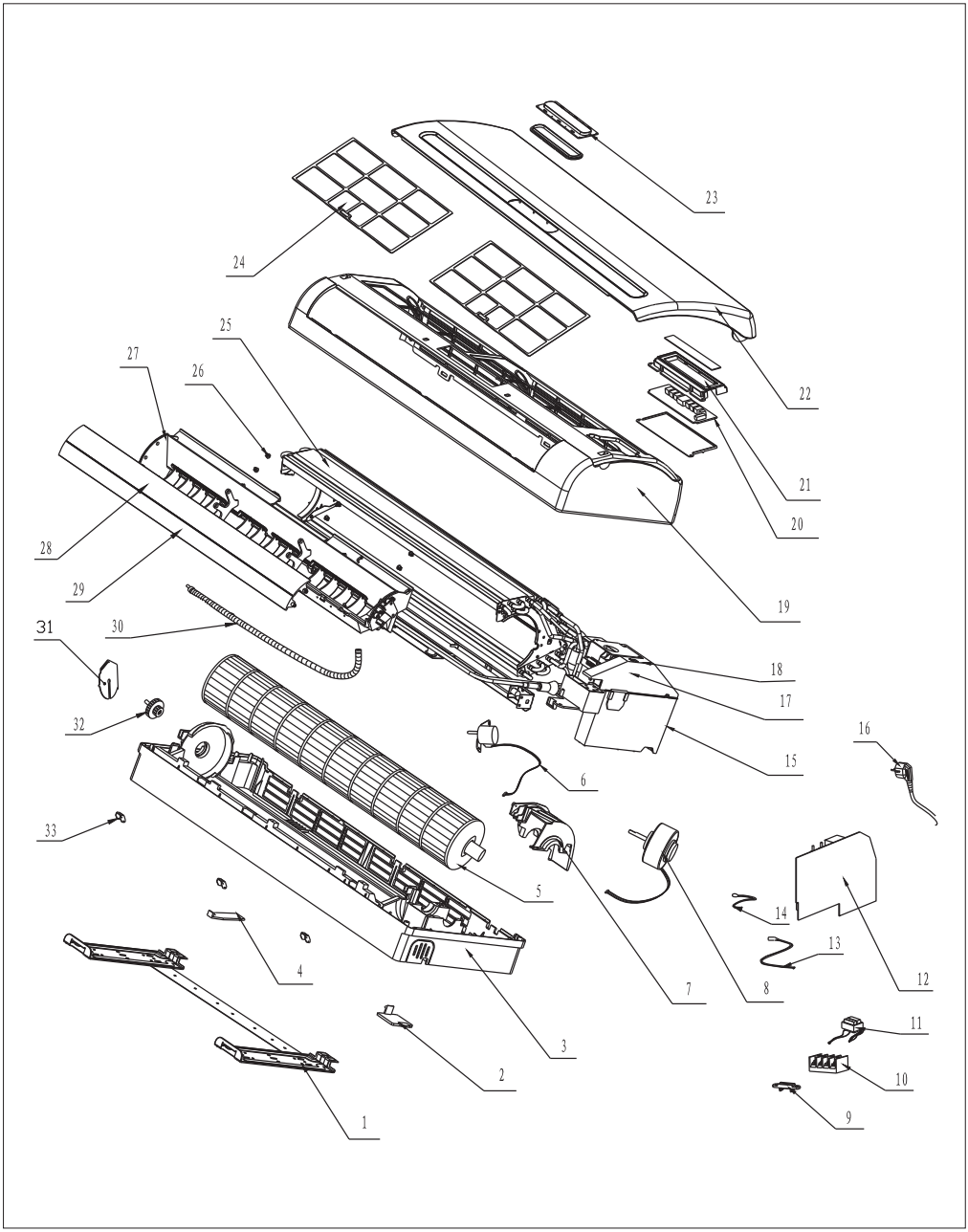

Все каталоги и инструкции здесь: https://splitsystema48.ru/instrukcii-po-ekspluatacii-kondicionerov.html

Exploded Views and Parts List

Indoor unit

AUS-12H53R120D*(De) AUS-18H53R220D*(Da) AUS-18H53R120D*(Da)

No.	English Part Name	qty.	remark	No.	English Part Name	qty.	remark
1	Mounting plate	1		24	Air filter assembly	2	
2	Pipe fixing plate 1	1		25	Evaporator	1	
3	Bottom enclosure	1		26	Deflector packing sleeve	6	
4	Pipe fixing plate 2	1		27	Drain hose	1	
5	Indoor unit fan	1		28	Upper swing louver	1	
6	Stepping motor	1		29	Bottom swing louver	1	
7	Motor box cover	1		30	Drain hose	1	
8	Indoor fan motor	1		31	Rubber bear support	1	
9	Connecting cable clip	1		32	Oil bearing	1	
10	Indoor unit terminal block	1		33	Screw cover	3	
11	Transformer	1					
12	Main Control board	1					
13	Pipe temperature sensor	1					
14	Room temperature sensor	1					
15	Electrical control box	1					
16	Power supply cord	1					
17	Electrical control cover2	1					
18	Electrical control cover1	1					
19	Enclosure	1					
20	LED	1	**D15**、**D17**(indoor display panel)				
21	LED plastic support	1	D1(control)				
22	Front panel	1	**D14**、**D15**、**D16** parted as upper panel and lower panel				
23	Indoor display panel	1	**D17**，**D18**(display piece)，**D9** without，**D8**(glass display panel)				

Все каталоги и инструкции здесь: https://splitsystema48.ru/instrukcii-po-ekspluatacii-kondicionerov.html

Exploded Views and Parts List

Indoor unit

AUS-09H53R120P*(Db) AUS-09H53R120P*(Db5)
AUS 12H53R120P*(Da4) AUS-12H53R120P*(Da)

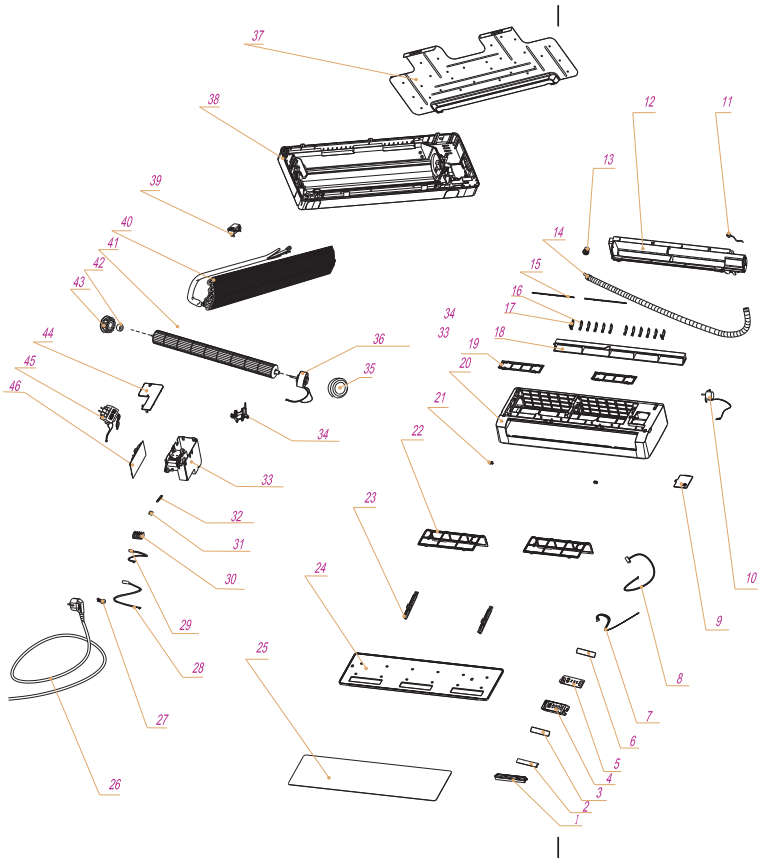

Все каталоги и инструкции здесь: https://splitsystema48.ru/instrukcii-po-ekspluatacii-kondicionerov.html

Exploded Views and Parts List

Indoor unit

AUS-09H53R120P*(Db) AUS-09H53R120P*(Db5)
AUS 12H53R120P*(Da4) AUS-12H53R120P*(Da)

No.	English Part Name	Quantity	No.	English Part Name	Quantity
1	Electrical control box with air sensitive display (optional)	1	28	Temperature sensor	1
2	Air sensitive display panel(optional)	1	29	Temperature sensor	1
3	Air sensitive display piece(optional)	1	30	Terminal block	1
4	Display electrical control box	1	31	Spring piece	2
5	LED	1	32	Grounded terminal	1
6	Display piece	1	33	Electrical control box for P1	1
7	Connecting wire for LED	1	34	Electrical supporter	1
8	Connecting wire	1	35	Rubber shock absorption base	1
9	Cover for front panel	1	36	Fan motor	1
10	Stepping motor	1	37	Mounting plate	1
11	Ionizer(optional)	1	38	Bottom enclosure	1
12	Water collecting tray for P1	1	39	Air sensitive detecting assembly(optional)	1
13	Drain cap	1	40	Evaporator	1
14	Drain hose	1	41	Indoor unit fan	1
15	Connecting pole	2	42	Oil bearing	1
16	Air leading vane	10	43	Rubber bear support	1
17	Air leading plectrum	2	44	Cover of electrical control box for P1	1
18	Swing louver for P1	1	45	Transformer	1
19	Air filter supporter	2	46	Main control board	1
20	P1 front panel	1			
21	Screw cover for B3	2			
22	Air filter	2			
23	Supporter for front panel	2			
24	Front panel for P series(optional)	1			
25	Decorating board for front panel of P series	1			
26	Power supply cord	1			
27	Power supply cord clip	1			

Все каталоги и инструкции здесь: https://splitsystema48.ru/instrukcii-po-ekspluatacii-kondicionerov.html

Exploded Views and Parts List

Indoor unit AUS-18H53R120C*(Da)

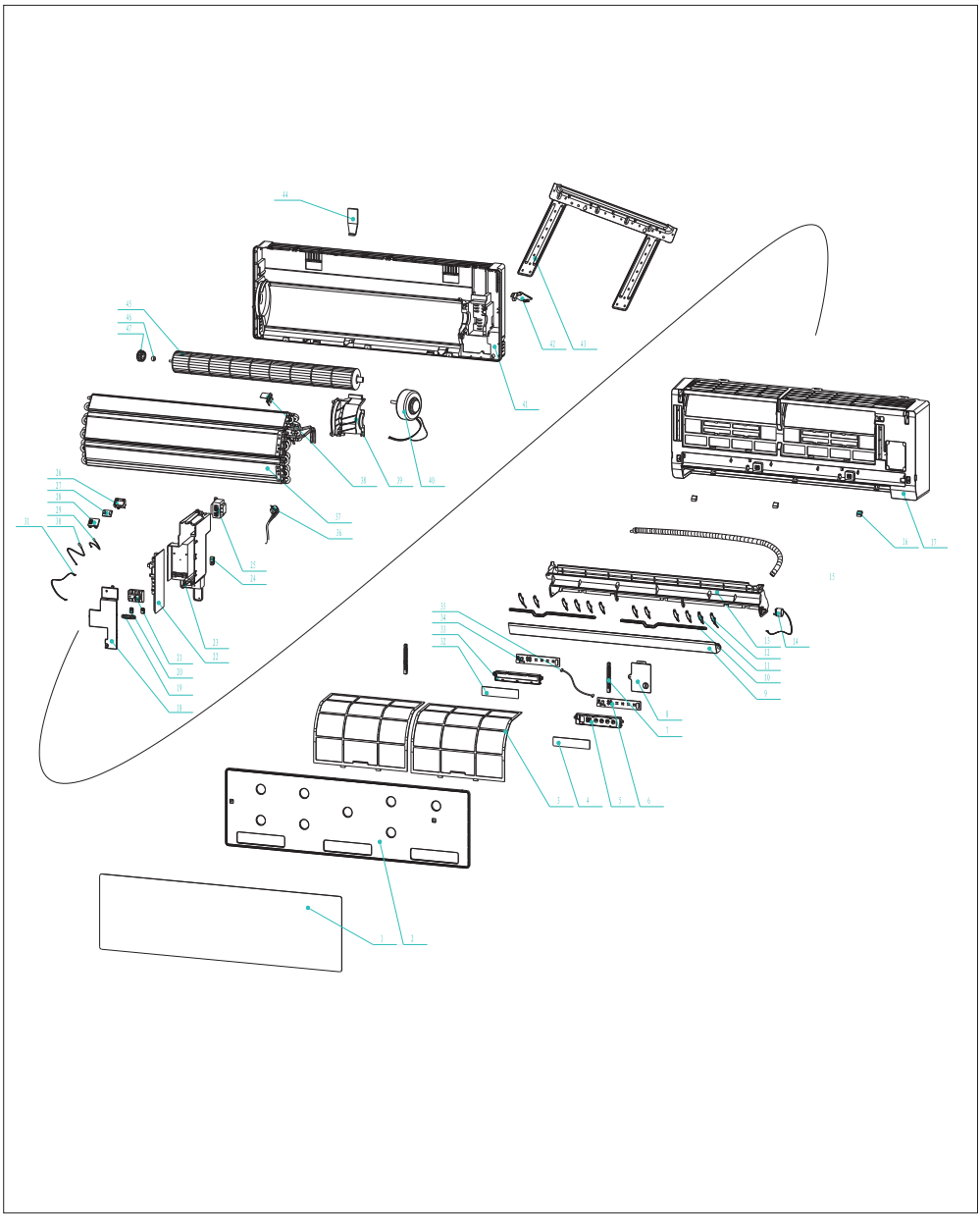

Все каталоги и инструкции здесь: https://splitsystema48.ru/instrukcii-po-ekspluatacii-kondicionerov.html

Exploded Views and Parts List

Indoor unit AUS-18H53R120C*(Da)

No.	English Part Name	qty.	No.	English Part Name	qty.
1	Decorating board for front panel(optional)	1	25	Transformer	1
2	Front panel(three types in all,optional)	1	26	Air sensitive detecting box(optional)	6
3	Air filter assembly	2	27	Air sensitive detecting panel(optional)	1
4	Display piece	1	28	Cover for air sensitive detecting(optional)	1
5	Display electrical control box	1	29	Temperature sensor	1
6	LED	1	30	Temperature sensor	1
7	Supporter for front panel	2	31	Connecting wire for LED	1
8	Cover for front panel	1	32	Air sensitive display piece(optional)	1
9	Swing louver	1	33	Electrical control box with air sensitive display (optional)	3
10	Connecting pole	2	34	Air sensitive display panel(optional)	1
11	Air leading vane	10	35	Connecting wire(optional)	1
12	Air leading plectrum	2	36	Power supply cord	1
13	Water collecting tray	1	37	Evaporator	1
14	Stepping motor	1	38	Holder for temperature sensor	1
15	Drain hose	1	39	Motor cover	1
16	Cover for screw	3	40	Indoor fan motor	1
17	Front panel	1	41	Bottom enclosure	1
18	Cover for electrical control box	1	42	Pipe fixed plate 1	1
19	Connecting cable clip	1	43	Mounting plate	1
20	Spring piece	2	44	Pipe fixed plate 2	1
21	Terminal block	1	45	Indoor unit fan	1
22	Main control board	1	46	Oil bearing	1
23	Electrical control box	1	47	Rubber bear support	1
24	Power supply cord clip	2			

Все каталоги и инструкции здесь: https://splitsystema48.ru/instrukcii-po-ekspluatacii-kondicionerov.html

Exploded Views and Parts List

Indoor unit AUS-24H53R230T*(Da)

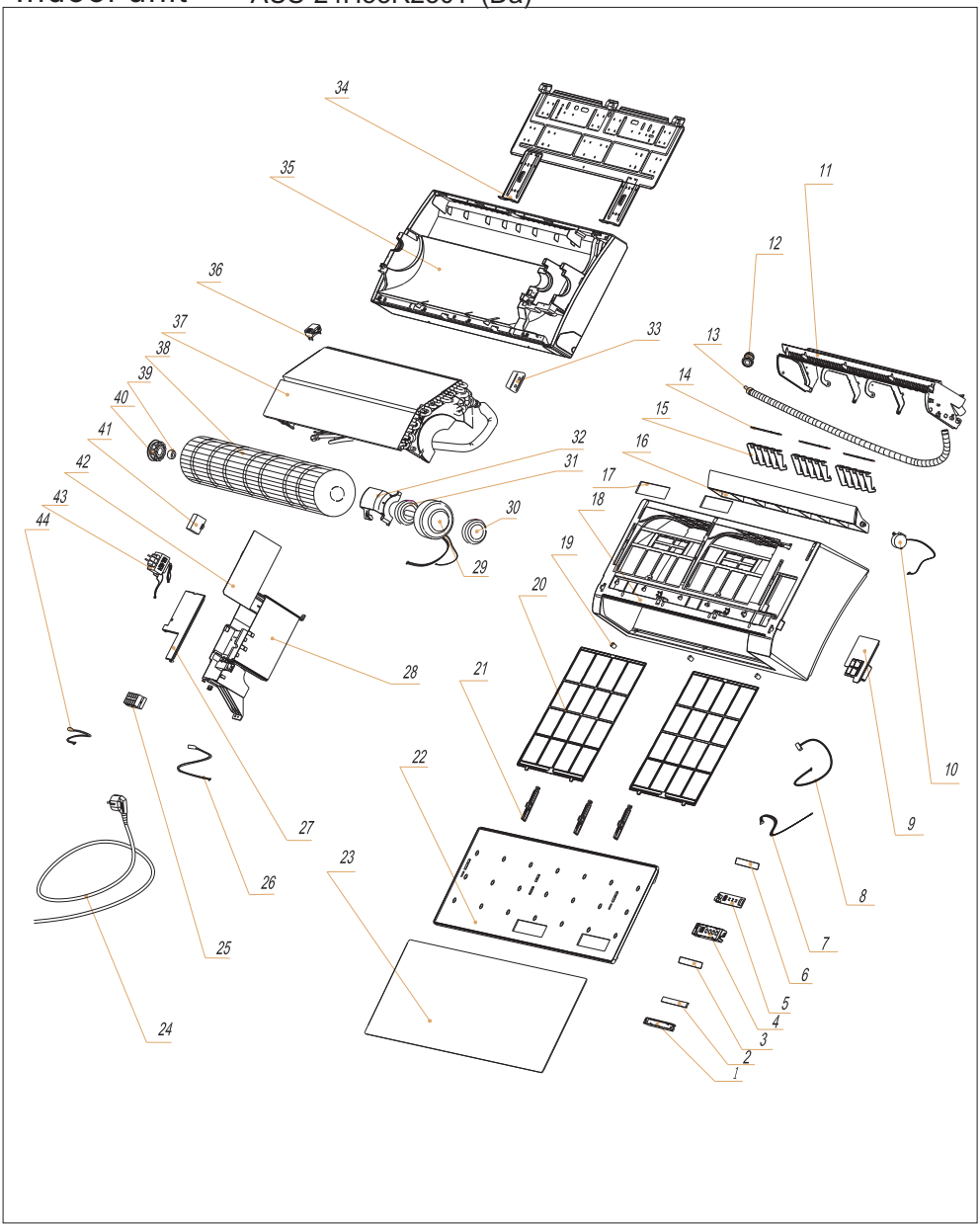

Все каталоги и инструкции здесь: https://splitsystema48.ru/instrukcii-po-ekspluatacii-kondicionerov.html

Exploded Views and Parts List

Indoor unit AUS-24H53R230T*(Da)

No.	English Part Name	qty.	No.	English Part Name	qty.
1	Display electrical control box(optional)	1	25	Indoor unit terminal block	2
2	Air sensitive display PCB(optional)	1	26	Room temperature sensor	1
3	Air sensitive display piece(optional)	1	27	Cover of electrical control box	1
4	Display electrical control box(optional)	1	28	Electrical control box	1
5	Indoor display panel	1	29	Indoor fan motor	1
6	Display piece	1	30	Left rubber shock absorptive base	1
7	Connecting wire for display PCB	1	31	Right rubber shock absorptive base	1
8	Connecting wire for display PCB	1	32	Motor installing board	1
9	Connecting cable clip	1	33	Pipe fixed plate	1
10	Stepping motor	1	34	Mounting plate	1
11	Water collecting tray	1	35	Bottom enclosure	1
12	Drain cap	1	36	Air sensitive detecting(optional)	1
13	Drain hose	1	37	Evaporator	1
14	Connecting bar	3	38	Indoor unit fan	1
15	Left and right air leading vane	15	39	Oil bearing	1
16	Swing louver	1	40	Rubber support for motor	1
17	Photic accelerant filter assembly/sterilize deodorization static filter(optional)	1	41	Fan motor capacitor	1
18	Enclosure	1	42	Main control board	1
19	Screw cover	1	43	Transformer	1
20	Air filter	1	44	Pipe temperature sensor	1
21	Front panel bracket	3			
22	Front panel(three types for option)	1			
23	Decorate board for front panel of T series (optional)	1			
24	Power supply cord	2			

Все каталоги и инструкции здесь: https://splitsystema48.ru/instrukcii-po-ekspluatacii-kondicionerov.html

Exploded Views and Parts List

Outdoor unit

AUS-09H53R120L*(Db) AUS-12H53R120L*(Da) AUS-12H53R120D*(De)
AUS-09H53R120P*(Db) AUS-12H53R120P*(Da) AUS-18H53R120D*(Da)

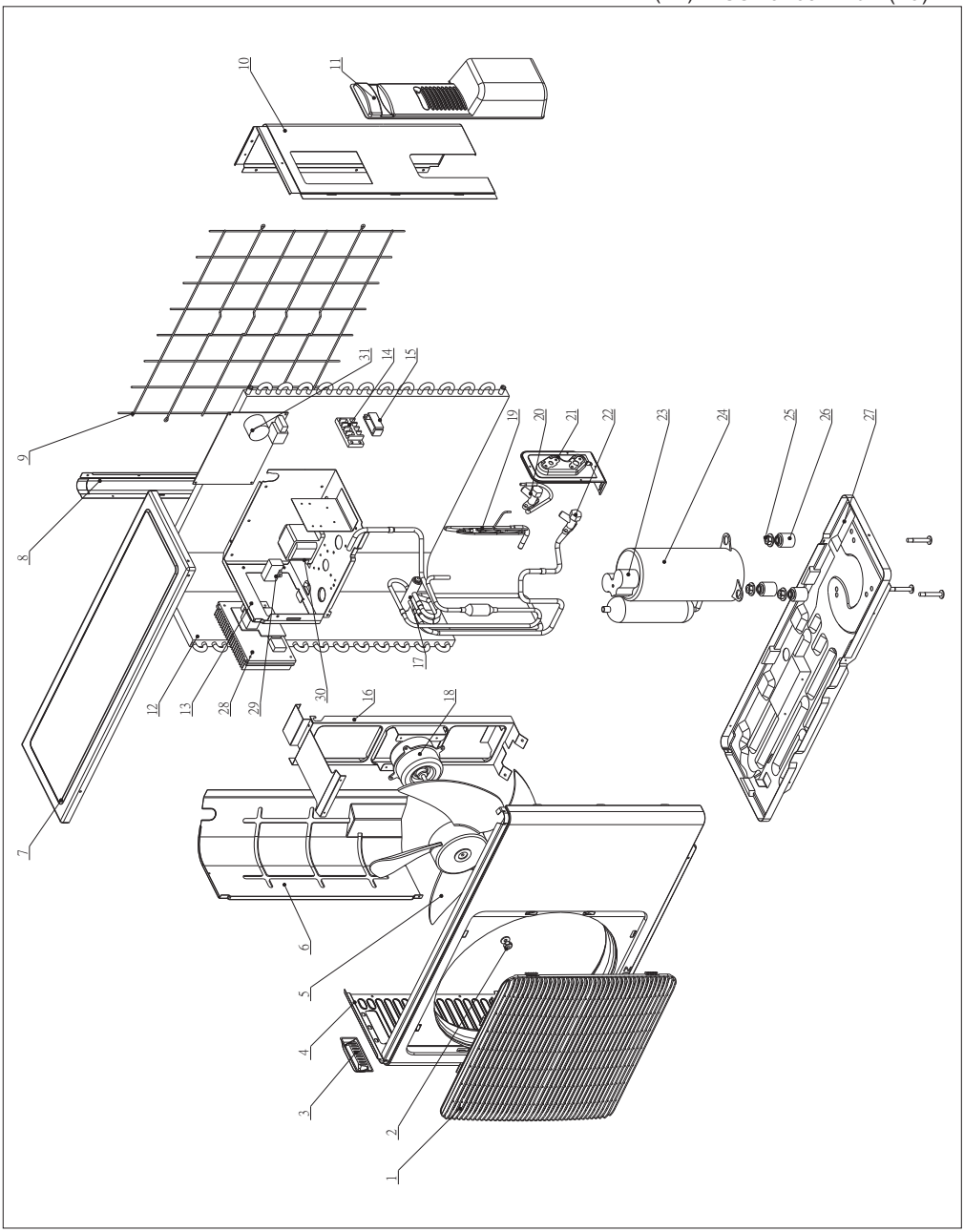

Все каталоги и инструкции здесь: https://splitsystema48.ru/instrukcii-po-ekspluatacii-kondicionerov.html

Exploded Views and Parts List

Outdoor unit

AUS-09H53R120L*(Db) AUS-12H53R120L*(Da) AUS-12H53R120D*(De)
AUS-09H53R120P*(Db) AUS-12H53R120P*(Da) AUS-18H53R120D*(Da)

No.	English Part Name	qty.	No.	English Part Name	qty.
1	air outlet grille	1	28	module board assembly	1
2	fan screw nut M6(left revolve)	1	29	sieve capacitance	1
3	left handle	1	30	filter	1
4	front panel	1	31	sieve board assembly	1
5	outdoor fan	1			
6	partition assembly	1			
7	top panel	1			
8	panel connector	1			
9	back cover	1			
10	right back side board	1			
11	outdoor electrical control box cover	1			
12	condenser	1			
13	electrical install board	1			
14	oudoor unit terminal block	1			
15	Power supply cord clip	1			
16	outdoor fan motor supporter	1			
17	four way valve	1			
18	outdoor fan motor	1			
19	capillary	1			
20	1/4 high pressure value	1			
21	valve board	1			
22	1/2 low pressure value	1			
23	compressor terminal cover	1			
24	compressor	1			
25	compressor screw	3			
26	compressor feets	3			
27	back board	1			

Все каталоги и инструкции здесь: https://splitsystema48.ru/instrukcii-po-ekspluatacii-kondicionerov.html

Exploded Views and Parts List

Outdoor unit AUS-18H53R220D*(Da)

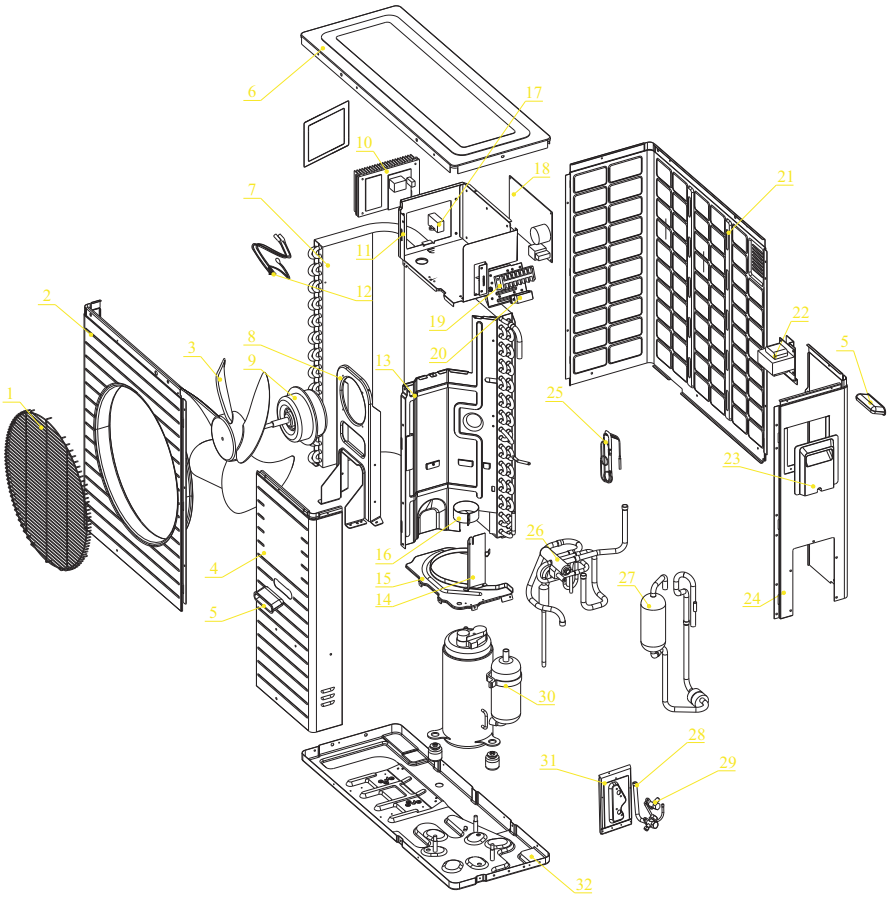

Все каталоги и инструкции здесь: https://splitsystema48.ru/instrukcii-po-ekspluatacii-kondicionerov.html

Exploded Views and Parts List

Outdoor unit AUS-18H53R220D*(Da)

No.	English Part Name	qty.	No.	English Part Name	qty.
1	Air outlet grille	1	26	Four way valve component	1
2	Left front plate	1	27	Suction pipe assembly	1
3	Axial flow fan blade	1	28	1/2 low pressure on-off valve	1
4	Right front plate	1	29	1/4 high pressure on-off valve	1
5	Handle	2	30	Compressor	1
6	Top cover	1	31	Valve board	1
7	Condenser	1	32	Back board	1
8	Outdoor fan motor supporter assembly	1			
9	Outdoor fan motor	1			
10	Module board assembly	1			
11	Electrical control box assembly	1			
12	Temperature sensor	1			
13	Partition board assembly	1			
14	Tube supporter	1			
15	Partition connect board	1			
16	Oil tank fixture	1			
17	Fan motor capacitor	1			
18	Power supply board assembly	1			
19	Outdoor termianl block	1			
20	Cable fixed clip	1			
21	Left back board assembly	1			
22	Reator	1			
23	Right handle	1			
24	Right back board assembly	1			
25	Capillary assembly	1			

Все каталоги и инструкции здесь: https://splitsystema48.ru/instrukcii-po-ekspluatacii-kondicionerov.html

Exploded Views and Parts List

Outdoor unit

AUS-24H53R230T*(Da)

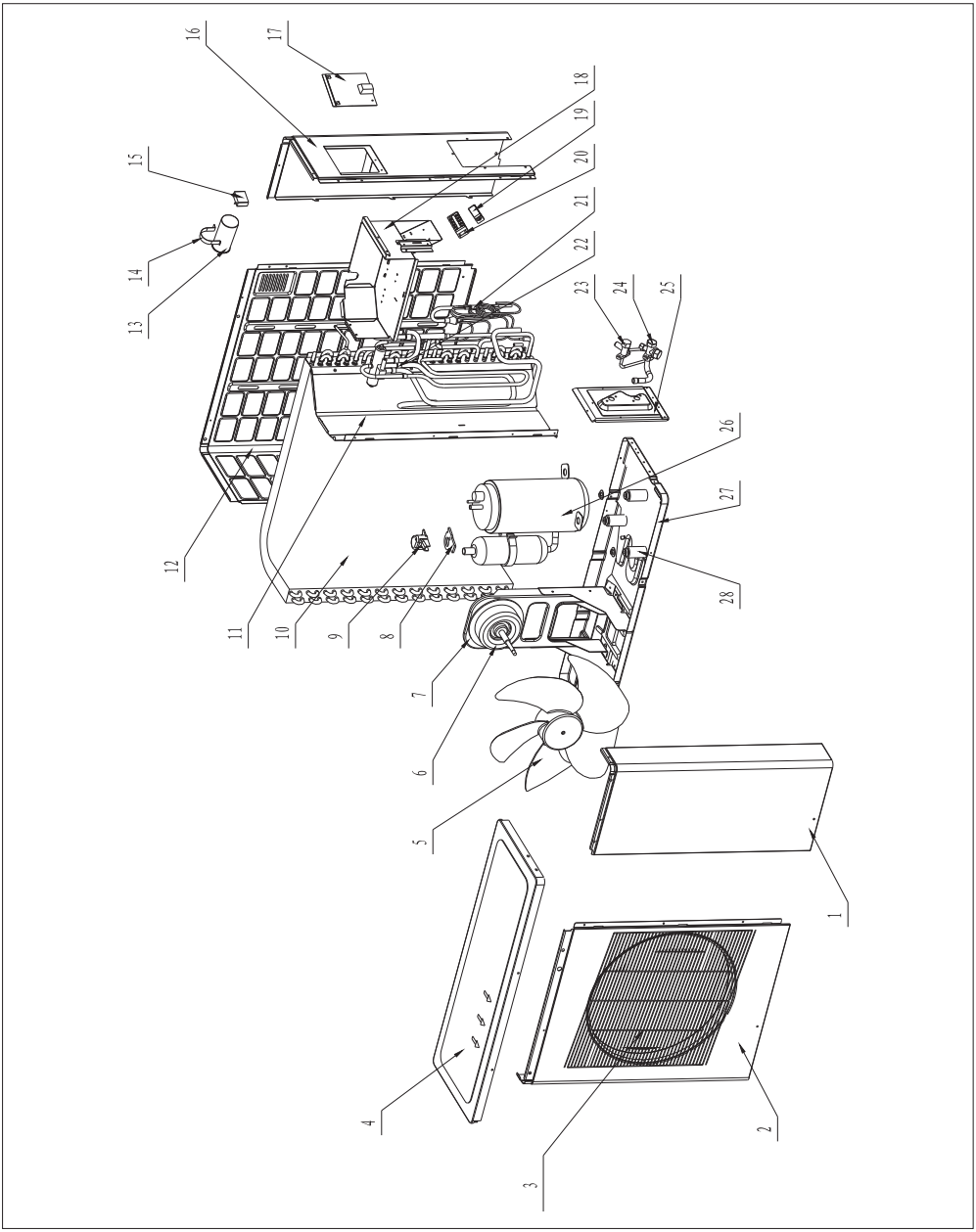

Все каталоги и инструкции здесь: https://splitsystema48.ru/instrukcii-po-ekspluatacii-kondicionerov.html

Outdoor unit AUS-24H53R230T*(Da)

No.	English Part Name	Quantity	No.	English Part Name
1	Right front plate	1	28	Rubber shock absorption
2	Left front plate	1		
3	Air outlet grille	1		
4	Top cover	1		
5	Outdoor unit fan	1		
6	Outdoor fan motor	1		
7	Outdoor fan motor supporter	1		
8	Terminal cover cushion	1		
9	Compressor terminal cover	1		
10	Condenser	1		
11	Partition	1		
12	Left back side plate	1		
13	Capacitor for compressor	1		
14	Capacitor fixing clip	1		
15	Fan motor capacitor	1		
16	Right back side plate	1		
17	Handle	2		
18	Electrical install board	1		
19	Power supply cord fixing	1		
20	Outdoor unit terminal block	1		
21	Capillary assembly	1		
22	Four way valve	1		

Все каталоги и инструкции здесь: https://splitsystema48.ru/instrukcii-po-ekspluatacii-kondicionerov.html

Wiring Diagrams

Indoor unit

AUS-09H53R120L*(Db)
AUS-18H53R220D*(Da)

AUS-12H53R120D*(De)

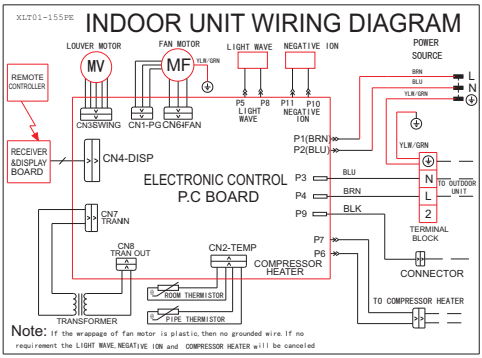

AUS-12H53R120L*(Da)

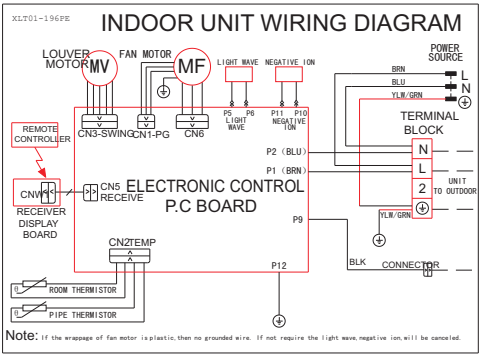

AUS-24H53R230T*(Da)

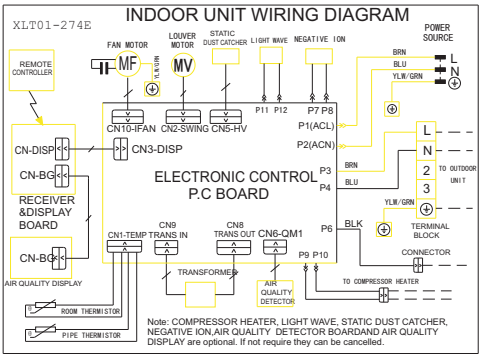

Все каталоги и инструкции здесь: https://splitsystema48.ru/instrukcii-po-ekspluatacii-kondicionerov.html

Wiring Diagrams

Indoor unit

AUS-09H53R120P*(Db)
AUS-12H53R120P*(Da)
AUS-18H53R120C*(Da)

AUS-09H53R120P*(Db5)
AUS 12H53R120P*(Da4)

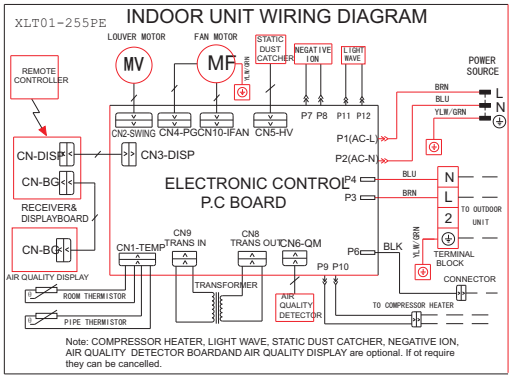

Or

AUS-09H53R120P*(Db)
AUS-12H53R120P*(Da)

AUS-09H53R120P*(Db5)
AUS 12H53R120P*(Da4)

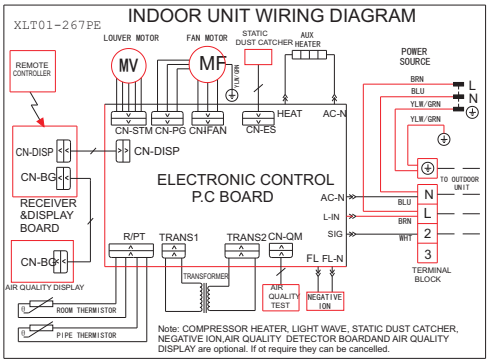

AUS-18H53R120D*(Da)

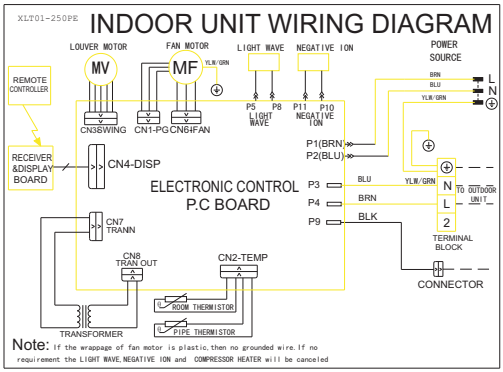

Все каталоги и инструкции здесь: https://splitsystema48.ru/instrukcii-po-ekspluatacii-kondicionerov.html

Wiring Diagrams

Outdoor unit

AUS-09H53R120L*(Db) AUS-09H53R120P*(Db)
AUS-12H53R120D*(De) AUS-09H53R120P*(Db5)
AUS 12H53R120P*(Da4) AUS-12H53R120P*(Da)

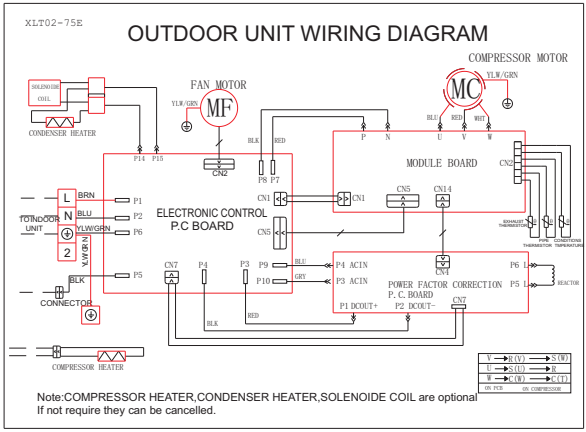

Or AUS-09H53R120P*(Db) AUS-12H53R120P*(Da)

AUS 12H53R120P*(Da4) AUS-09H53R120P*(Db5)

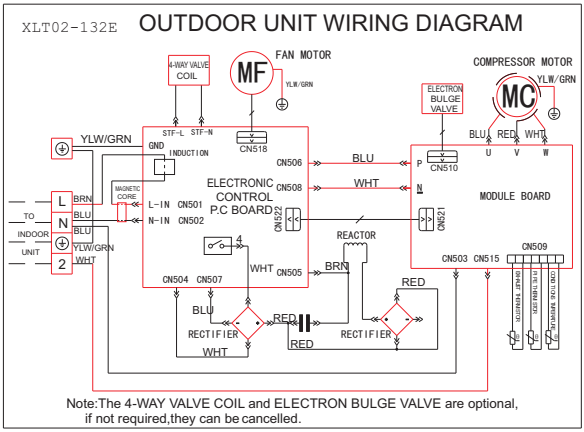

Все каталоги и инструкции здесь: https://splitsystema48.ru/instrukcii-po-ekspluatacii-kondicionerov.html

Wiring Diagrams

Outdoor unit

AUS-12H53R120L*(Da)

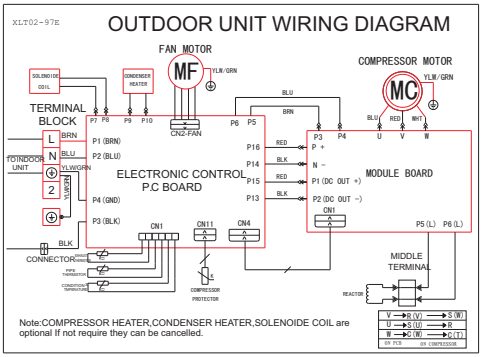

AUS-18H53R220D*(Da) AUS-24H53R230T*(Da)

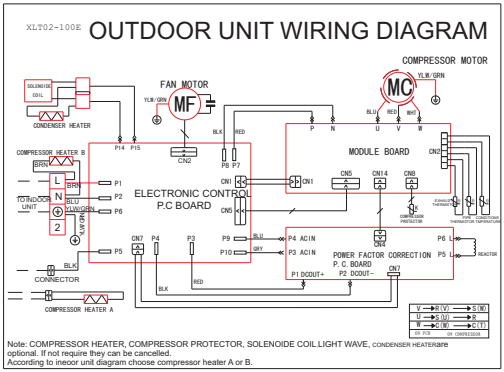

AUS-18H53R120D*(Da) AUS-18H53R120C*(Da)

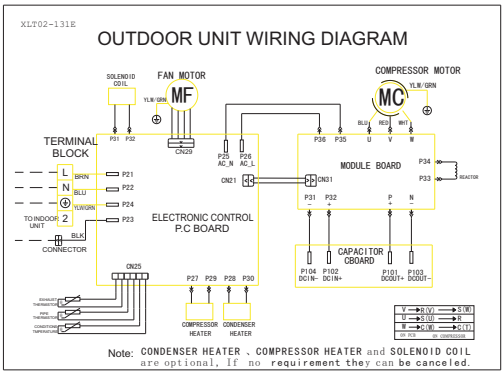

Все каталоги и инструкции здесь: https://splitsystema48.ru/instrukcii-po-ekspluatacii-kondicionerov.html